B651-12
(reaffirmed 2017)

Accessible design for the built environment

Reprinted October 2015. This reprint is being issued to incorporate Updates into the original 2012 Standard.

Legal Notice for Standards

Canadian Standards Association (CSA) standards are developed through a consensus standards development process approved by the Standards Council of Canada. This process brings together volunteers representing varied viewpoints and interests to achieve consensus and develop a standard. Although CSA administers the process and establishes rules to promote fairness in achieving consensus, it does not independently test, evaluate, or verify the content of standards.

Disclaimer and exclusion of liability

This document is provided without any representations, warranties, or conditions of any kind, express or implied, including, without limitation, implied warranties or conditions concerning this document's fitness for a particular purpose or use, its merchantability, or its non-infringement of any third party's intellectual property rights. CSA does not warrant the accuracy, completeness, or currency of any of the information published in this document. CSA makes no representations or warranties regarding this document's compliance with any applicable statute, rule, or regulation.

IN NO EVENT SHALL CSA, ITS VOLUNTEERS, MEMBERS, SUBSIDIARIES, OR AFFILIATED COMPANIES, OR THEIR EMPLOYEES, DIRECTORS, OR OFFICERS, BE LIABLE FOR ANY DIRECT, INDIRECT, OR INCIDENTAL DAMAGES, INJURY, LOSS, COSTS, OR EXPENSES, HOWSOEVER CAUSED, INCLUDING BUT NOT LIMITED TO SPECIAL OR CONSEQUENTIAL DAMAGES, LOST REVENUE, BUSINESS INTERRUPTION, LOST OR DAMAGED DATA, OR ANY OTHER COMMERCIAL OR ECONOMIC LOSS, WHETHER BASED IN CONTRACT, TORT (INCLUDING NEGLIGENCE), OR ANY OTHER THEORY OF LIABILITY, ARISING OUT OF OR RESULTING FROM ACCESS TO OR POSSESSION OR USE OF THIS DOCUMENT, EVEN IF CSA HAS BEEN ADVISED OF THE POSSIBILITY OF SUCH DAMAGES, INJURY, LOSS, COSTS, OR EXPENSES.

In publishing and making this document available, CSA is not undertaking to render professional or other services for or on behalf of any person or entity or to perform any duty owed by any person or entity to another person or entity. The information in this document is directed to those who have the appropriate degree of experience to use and apply its contents, and CSA accepts no responsibility whatsoever arising in any way from any and all use of or reliance on the information contained in this document.

CSA is a private not-for-profit company that publishes voluntary standards and related documents. CSA has no power, nor does it undertake, to enforce compliance with the contents of the standards or other documents it publishes.

Standards Update Service

B651-12 — Reprinted October 2015

Title: Accessible design for the built environment
Pagination: 281 pages (xviii preliminary and 263 text)

Revisions issued: Update No. 1 — October 2015

Automatic notifications about any updates to this publication are available.

- To register for e-mail notifications, and/or to download any existing updates in PDF, enter the Online Store at **shop.csa.ca** and click on **CSA Update Service** on the navigation bar.
- The **List ID** for this document is **2421835.**

CSA Standard

B651-12
Accessible design for the built environment

CANADIAN STANDARDS ASSOCIATION

Published in May 2012 by
Canadian Standards Association
A not-for-profit private sector organization
5060 Spectrum Way, Suite 100,
Mississauga, Ontario, Canada L4W 5N6
1-800-463-6727 • 416-747-4044

Visit our Online Store at **shop.csa.ca**

To purchase CSA Standards and related publications, visit CSA's Online Store at **shop.csa.ca** or call toll-free 1-800-463-6727 or 416-747-4044.

ISBN 978-1-55491-929-1

Contents

Technical Committee on Accessible Design xiii

Preface xvi

1 Scope 1
1.1 Purpose 1
1.2 Application 1
1.3 Dimensions 1
1.4 Commentary and figures 2
1.5 Annexes 2
1.6 Terminology 3
1.7 Large print 3

2 Reference publications 3

3 Definitions 4

4 General requirements 9
4.1 Area allowances 9
4.2 Operating controls 12
4.2.1 Scope 12
4.2.2 Floor area 12
4.2.3 Height 12
4.2.4 Operation 13
4.2.5 Control devices 14
4.2.6 Visual displays 14
4.2.7 Illumination 14
4.2.8 Colour contrast 14
4.3 Floor or ground surfaces 15
4.3.1 General 15
4.3.2 Changes in level 15
4.3.3 Carpets 17
4.3.4 Gratings 17
4.3.5 Tactile walking indicator surfaces 17

4.4 Protrusion hazards 25
4.4.1 Protruding objects 25
4.4.2 Width maintenance 25
4.4.3 Headroom 25
4.5 Signage 29
4.5.1 Location 29
4.5.2 Configuration of signs 29
4.5.3 Characters 29
4.5.4 Pictograms and symbols 31
4.5.5 Illumination 31
4.5.6 Tactile signs 31
4.5.7 Symbol of accessibility 33

5 Interior circulation 37
5.1 Accessible routes 37
5.1.1 Width 37
5.1.2 Slope 38
5.1.3 Lineup guides 41
5.1.4 Safety 43
5.2 Doors and doorways 43
5.2.1 Opening width 43
5.2.2 Manoeuvring area at doors 45
5.2.3 Multiple-leaf doorways 50
5.2.4 Revolving doors 51
5.2.5 Two doors in series 51
5.2.6 Thresholds 52
5.2.7 Door hardware 53
5.2.8 Door-opening force 55
5.2.9 Power-assisted doors 55
5.2.10 Glazed panels 58
5.2.11 Doors in primary horizontal circulation routes 59
5.2.12 Turnstile gates 59
5.3 Handrails 60
5.3.1 Handrail grip 60
5.3.2 Recessed handrail 61
5.4 Stairs 63

5.4.1 Treads and risers 63
5.4.2 Nosing 64
5.4.3 Tactile attention indicator surfaces at stairs 65
5.4.4 Stair handrails 67
5.5 Ramps 71
5.5.1 Running slope and length 71
5.5.2 Cross slope 72
5.5.3 Width 72
5.5.4 Landings 72
5.5.5 Surfaces 75
5.5.6 Edge protection 76
5.5.7 Illumination 78
5.5.8 Ramp handrails 78
5.6 Elevating devices 79
5.6.1 Elevators 79
5.6.2 Platform lifts 80
5.6.3 Escalators 80
5.6.4 Moving walkways 80
5.7 Emergency and security 81
5.7.1 Visual alarms 81
5.7.2 Areas of refuge 82
5.7.3 Evacuation plans 86
5.7.4 Access to secure areas 86

6 Interior facilities 87
6.1 Drinking fountains 87
6.1.1 Spouts 87
6.1.2 Controls 88
6.1.3 Floor area 88
6.1.4 Colour contrast 88
6.1.5 Cantilevered fountains 88
6.2 Washroom facilities 90
6.2.1 Identification 91
6.2.2 Floor area 91
6.2.3 Lavatories 93
6.2.4 Washroom accessories 96

6.2.5 Grab bars 98
6.2.6 Toilets 99
6.2.7 Toilet stalls 102
6.2.8 Urinals 106
6.3 Universal washrooms 109
6.3.1 General 109
6.3.2 Washroom door 109
6.3.3 Washroom accessories 110
6.4 Change benches 113
6.5 Bathing facilities 114
6.5.1 Water temperature 114
6.5.2 Showerheads 115
6.5.3 Enclosures 115
6.5.4 Shower floors 115
6.5.5 Roll-in shower stalls 115
6.5.6 Shower stalls with curb 118
6.5.7 Bathtubs 122
6.6 Communications 124
6.6.1 Assistive listening systems 124
6.6.2 Public telephones 125
6.7 Seating 131
6.7.1 Spaces at tables and counters 131
6.7.2 Rest area seating 133
6.7.3 Viewing spaces in assembly areas 135

7 Residential accommodation — Permanent and short-term 139
7.1 Scope 139
7.2 Design requirements 140
7.2.1 Common use spaces 140
7.2.2 Dwelling units 140
7.3 Visitable dwelling units 140
7.3.1 Exterior circulation 140
7.3.2 Entrance door 141
7.3.3 Interior circulation 141
7.3.4 Washroom 142
7.4 Accessible dwelling units 142

7.4.1 Circulation 142
7.4.2 Interior circulation 146
7.4.3 Bathrooms 146
7.4.4 Kitchens 151
7.4.5 Bedrooms 158
7.4.6 General features of dwellings 158
7.4.7 Outdoor living areas 160

8 Exterior circulation, spaces, and amenities 161
8.1 Scope 161
8.2 Accessible routes 161
8.2.1 General 161
8.2.2 Width 162
8.2.3 Slope 163
8.2.4 Drainage 163
8.2.5 Edge protection 163
8.2.6 Shared-use routes 163
8.2.7 Exterior ramps 164
8.2.8 Exterior stairs 165
8.2.9 Illumination for pedestrian routes 165
8.3 Pedestrian crossings 166
8.3.1 General 166
8.3.2 Pedestrian crossing variations 166
8.3.3 Curb ramps and blended transitions 167
8.3.4 Crosswalks 172
8.3.5 Alignment of pedestrian crossing components 173
8.3.6 Medians and pedestrian refuge islands 174
8.3.7 Pedestrian crossing signals 175
8.3.8 Speed bumps 176
8.3.9 Bollards 177
8.3.10 Underpasses and overpasses 177
8.4 Intersection design 178
8.4.1 General 178
8.4.2 Types of intersections 178
8.4.3 Intersection design features 181
8.5 Transit stops 183

8.5.1 General 182
8.5.2 Identification 183
8.5.3 Boarding or alighting areas 183
8.5.4 Transit shelters 184
8.6 Urban furniture and equipment 185
8.6.1 General 185
8.6.2 Amenity zone 185
8.6.3 Rest areas 186
8.6.4 Public telephones 188
8.6.5 Drinking fountains 188
8.6.6 Permanent outdoor washrooms 188
8.6.7 Information kiosks 188
8.6.8 Self-service interactive devices 189
8.6.9 Exterior signage 189
8.6.10 Bicycle stands 189
8.6.11 Newspaper dispensers, mail or courier boxes 189
8.6.12 Waste receptacles, recycling bins, or ashtrays 190
8.6.13 Reflecting pools 190
8.6.14 Miscellaneous items 190
8.7 Landscaping elements 190
8.7.1 Flower or shrub planters 190
8.7.2 Planting bed edges 191
8.7.3 Vegetation 191
8.7.4 Guy wires 191
8.7.5 Grates around trees 191
8.7.6 Tree guards 192
8.8 Temporary facilities 192
8.8.1 Construction along an accessible route 192
8.8.2 Scaffolding 192
8.8.3 Temporary outdoor toilets 192

9 Vehicular access 193
9.1 Scope 193
9.2 Pedestrian routes 193
9.3 Passenger pick-up areas 194
9.3.1 Access aisle 194

9.3.2 Height clearance 194
9.4 Signage for designated parking 196
9.4.1 Designated spaces 196
9.4.2 Vertical signs 199
9.4.3 Pavement signs 200
9.5 Designated parking 200
9.5.1 Surface 200
9.5.2 Designated spaces for cars 200
9.5.3 Designated car spaces for limited mobility users 203
9.5.4 Designated spaces for vans 204
9.5.5 Height clearance for vans 206
9.6 Ticketing dispensers or paying machines 207

Annexes

A (informative) — Environmental considerations 208
B (informative) — Anthropometrics of mobility aid users 211
C (informative) — Potential for slip of floor and tread finishes 230
D (informative) — References for residential accommodation 236
E (normative) — Elevator requirements for persons with physical disabilities 238
F (informative) — References for accessible outdoor recreational environments 261

Tables

1 — Changes in level 15
2 — Dome diameter and spacing combinations 18
3 — Bar width and spacing combinations 22
4 — Character height relative to viewing distance 30
5 — Manoeuvring area at doors 46
6 — Number of wheelchair viewing spaces 136
7 — Recommended number of designated parking spaces 197

Figures

1 — Minimum floor area for a person using a manual wheelchair 10

2 — Minimum area at the toe level for a person using a manual wheelchair to make a U-turn 11
3 — Height of operating controls 13
4 — Changes in level 16
5 — Tactile attention indicator surface 20
6 — Tactile direction indicator surface 24
7 — Limits of protruding objects 26
8 — Overhead hazards 28
9 — Legibility of printed characters 33
10 — Location and size of tactile signs 34
11 — International symbol of access 35
12 — Examples of service identification signs incorporating the International symbol of access 36
13 — Width of interior accessible routes 38
14 — Width of accessible checkout lanes 39
15 — Width of accessible route around an obstacle 40
16 — Lineup area 42
17 — Clear opening width of doorway 44
18 — Manoeuvring area at doors 47
19 — Manoeuvring area at doors in series 51
20 — Handles 54
21 — Guards at out-swinging power-assisted door 56
22 — Access gate beside turnstiles 59
23 — Handrails 61
24 — Handrail shapes 62
25 — Handrail in a recess 63
26 — Stair detail 66
27 — Stair handrails 68
28 — Continuous inside handrail at stairs 69
29 — Handrail extension at bottom of stairs 70
30 — Handrail extension at top of stairs 71
31 — Ramp slope 73
32 — Ramps and landings 74
33 — Ramp edge protection 77
34 — Ramp handrail extensions 79

35 — Example of area of refuge **84**
36 — Directional evacuation signs **85**
37 — Recessed drinking fountain **89**
38 — Spout height and knee clearance at cantilevered fountain **90**
39 — Example of a washroom layout **92**
40 — Lavatory clearances **94**
41 — Faucets **96**
42 — Washroom accessory heights **98**
43 — Toilet **102**
44 — Toilet stall **104**
45 — Toilet stall for users with limited mobility **106**
46 — Urinal **108**
47 — Universal washroom **111**
48 — Change bench **114**
49 — Roll-in shower stall **118**
50 — Example of a shower stall with curb **121**
51 — Bathtub area and grab bars **124**
52 — Symbols of accessibility for persons who are hard of hearing **127**
53 — Telephone height and shelf **128**
54 — Symbol for teletypewriter (TTY) **130**
55 — Seating at tables and counters **132**
56 — Bench area **134**
57 — Assembly area viewing spaces **137**
58 — Stadium or arena viewing spaces **138**
59 — Toilet access area and structural support in walls **149**
60 — Plan of parallel kitchen **152**
61 — Work surface and sink **154**
62 — Cooking unit, oven, and pantry storage **156**
63 — Clothes closets **159**
64 — Accessible route and curb ramp with flared sides **170**
65 — Curb ramp with returned curb sides **171**
66 — Intersection design **174**
67 — Picnic table **187**
68 — Access aisle at passenger pick-up area **195**

69 — Height clearance at passenger pick-up area 195
70 — Designated parking signs 198
71 — Car parking space 201
72 — Car parking space, diagonal to curb 202
73 — Parallel car parking space 203
74 — Perpendicular van parking space 205
75 — Parallel van parking space 206

Technical Committee on Accessible Design

C. Smart	Smart Move Training & Development Inc., Thornbury, Ontario	Chair
J. Bentley	Canadian Hearing Society, Toronto, Ontario	
B. Dion	Betty Dion Enterprises Ltd., Ottawa, Ontario	
N. Di Cesare	American Standard, Inc., Mississauga, Ontario	Associate
G. Dupont	Montréal, Québec	
G. Ens	Public Works & Government Services Canada, Gatineau, Québec	
P. Falta	Mount-Royal, Québec	
G. Fernie	Toronto Rehabilitation Institute, Toronto, Ontario	Associate
D. Finn	Industry Canada, Ottawa, Ontario	
C. Fréchette	Ottawa, Ontario	
H. Goldberg	Canadian Human Rights Commission, Ottawa, Ontario	
V. Helfand	Barrier-Free Architecturals Inc., Toronto, Ontario	

C. Howatt	Ottawa Valley Kitchens, Richmond, Ontario	
C. Jeha	Eye Catch Signs Ltd., Halifax, Nova Scotia	
C. Joseph	Human Resources Social Development Canada, Gatineau, Québec	
S. Little	Pickering Ontario Consumer Representative	Associate
G. Mingarelli	Canadian Transportation Agency, Gatineau, Québec	
L. MacDonald	The Canadian National Institute for the Blind, Toronto, Ontario	
M. McWhirter	Shoppers Home Health Care, Toronto, Ontario	Associate
J. Mycan	Ryerson University, Toronto, Ontario	Associate
C. Nicol	Toronto Advocacy Committee of the Canadian National Institute for the Blind, Toronto, Ontario Consumer Representative	
D. Nimchuk	TD Canada Trust, Co., Toronto, Ontario	
S. Rawalpindiwala	Kohler Co., Kohler, Wisconsin, USA	Associate

J. Redmond	City of Winnipeg, Winnipeg, Manitoba	Associate
S. Remedios	Delta Faucet Company, Indianapolis, Indiana, USA	
L. Ringaert	Seattle, Washington, USA Consumer Representative	
B. Topping	Designable Environments Inc., Mississauga, Ontario	
I. Brodie	Canadian Standards Association, Mississauga, Ontario	Project Manager

In Memoriam

This edition of B651 is dedicated to David Rapson, our colleague and friend who contributed significantly to this Standard as a member of the Technical Committee.

Preface

UN Convention on the Rights of Persons with Disabilities
Adopted by the UN General Assembly in 2006, this ground-breaking, legally binding UN Convention promotes, protects, and ensures that persons with disabilities have the full and equal enjoyment of all human rights — a major step towards equalizing their opportunities and participation in society.

This is the fourth edition of B651, **Accessible design for the built environment**. It supersedes a previous 2004 edition, and two earlier editions entitled **Barrier-Free Design,** published in 1995 and 1990.

This Standard contains requirements for making buildings and other facilities accessible to persons with a range of physical, sensory, or cognitive disabilities. It was developed to fulfill an expressed need for a national technical standard that covers many different types of buildings and environmental facilities, and can be referenced in whole or in part by a variety of adopting agencies or jurisdictions.

The Technical Committee on Accessible Design has also produced two related Standards, CSA B651.1-09, **Accessible design for automated banking machines**, and CAN/CSA-B651.2-07, **Accessible design for self-service interactive devices**.

This Standard does not have the force of law unless mandated by legislation or called up in the regulations of an authority having jurisdiction. The user is advised to contact the local authority having jurisdiction in this field to determine to what extent this edition of the Standard is referenced.

Users should understand that the requirements in this Standard are minimum levels. The technical requirements result from a consensus of the Technical Committee members, who represent a broad spectrum of interests. The members are helped and encouraged by the public comments received as a result of the wide distribution of a draft at the public review stage.

Significant changes to this edition include the following:

(a) restructuring of the content to make it more logical and easier to locate, follow, and reference particular clauses;
(b) expanded clauses that include
  (i) new requirements for rights-of-way; and
  (ii) new definitions;
(c) altered or additional requirements for
  (i) tactile walking surface indicators;
  (ii) standard and universal washrooms; and
  (iii) residential accommodation; and
(d) a new Annex F on References for accessible outdoor recreational environments.

This Standard was prepared by the Technical Committee on Accessible Design, under the jurisdiction of the Strategic Steering Committee on Community Safety and Well-Being, and has been formally approved by the Technical Committee.

May 2012

Notes:

(1) Use of the singular does not exclude the plural (and vice versa) when the sense allows.

(2) Although the intended primary application of this Standard is stated in its Scope, it is important to note that it remains the responsibility of the users of the Standard to judge its suitability for their particular purpose.

(3) This publication was developed by consensus, which is defined by **CSA Policy governing standardization — Code of good practice for standardization** as "substantial agreement. Consensus implies much more than a simple majority, but not necessarily unanimity". It is consistent with this definition that a member may be included in the Technical Committee list and yet not be in full agreement with all clauses of this publication.

(4) To submit a request for interpretation of CSA Standards, please send the following information to **inquiries@csa.ca** and include "Request for interpretation" in the subject line:
  (a) define the problem, making reference to the specific clause, and, where appropriate, include an illustrative sketch;

(b) provide an explanation of circumstances surrounding the actual field condition; and
(c) where possible, phrase the request in such a way that a specific "yes" or "no" answer will address the issue.

Committee interpretations are processed in accordance with the CSA Directives and guidelines governing standardization and are published in CSA's Current Standard Activities, which is available on the CSA website at **standardsactivities.csa.ca.**

(5) CSA Standards are subject to periodic review, and suggestions for their improvement will be referred to the appropriate committee. To submit a proposal for change to CSA Standards, please send the following information to **inquiries@csa.ca** and include "Proposal for change" in the subject line:
(a) Standard designation (number);
(b) relevant clause, table, and/or figure number;
(c) wording of the proposed change; and
(d) rationale for the change.

B651-12
Accessible design for the built environment

1 Scope

1.1 Purpose

This Standard specifies technical requirements on how to make buildings and the exterior built environment accessible and safely usable by persons with physical, sensory, or cognitive disabilities.

Commentary:

(1) Temporary buildings and facilities provided for public use should also comply with the technical requirements of this Standard. Such temporary facilities may include teaching spaces, reviewing stands, exhibit areas, bleachers, first-aid facilities, or pedestrian passageways around construction sites.

(2) Where public access is permitted during construction, renovation, or maintenance of a facility or an exterior environment, the requirements of this Standard should be respected to provide safe and equitable use for everyone.

(3) Some people with disabilities may have requirements beyond the levels addressed in this Standard.

1.2 Application

This Standard describes technical requirements that can be used in the design and construction of new facilities or exterior environments, or in modifications to existing facilities. This Standard does not address the application of the technical requirements. The extent to which these requirements have to be applied is the responsibility of other authorities having jurisdiction.

1.3 Dimensions

This Standard contains minimum requirements based on adult dimensions. Dimensions are given in SI (metric) units (typically in

millimetres) and, where converted from foot/pound (imperial) units, have been rounded off with respect to critical dimensions. All dimensions in figures are given in millimetres and are measured to the centreline, unless otherwise specified.

Commentary:

(1) When designing for specific individuals, their particular abilities and preferences should be taken into account. For example, some people prefer to transfer to or from a wheelchair towards their preferred side when using toilet facilities.

(2) If a facility is primarily to serve children, dimensions and other provisions should be adjusted to make them suitable for children.

1.4 Commentary and figures

Commentary and figures are included for explanatory or illustrative purposes only and are not a mandatory part of the Standard. If there is any difference between the text and figure (where provided), the text shall take precedence.

The symbol of a right angle, located in the upper left-hand corner of each figure, is an indicator to persons with visual impairments that a figure follows.

1.5 Annexes

Annex A, "Environmental considerations", is an introduction to several topics that are only partially covered in this Standard, but that have broad environmental implications for the accessibility and usability of spaces by all persons, whether they have disabilities or not. Annexes B to D provide additional information on topics considered in the Standard. Annex F provides references for accessible outdoor recreational environments, which are not otherwise addressed in the Standard.

Annex E is a mandatory Annex.

1.6 Terminology

In this Standard, "shall" is used to express a requirement, i.e., a provision that the user is obliged to satisfy in order to comply with the standard; "should" is used to express a recommendation or that which is advised but not required; and "may" is used to express an option or that which is permissible within the limits of the standard.

Commentary accompanying clauses do not include requirements or alternative requirements; the purpose of a commentary accompanying a clause is to separate from the text explanatory or informative material.

Commentary to tables and figures are considered part of the table or figure and may be written as requirements.

Annexes are designated normative (mandatory) or informative (nonmandatory) to define their application.

1.7 Large print

Consistent with the recommendations of the B651 series of standards, and for ease of reading the information, this Standard has been printed in a 14 point font size.

2 Reference publications

This Standard refers to the following publications, and where such reference is made, it shall be to the edition listed below. See Annexes A, B, D, and F for additional reference publications.

CSA (Canadian Standards Association)

Δ ASME A17.1-2013/CSA B44-13
Safety Code for Elevators and escalators

B355-09
Lifts for persons with physical disabilities

CAN/CSA-B613-00 (R2005)
Private residence lifts for persons with physical disabilities

B651.1-09
Accessible design for automated banking machines

CAN/CSA-B651.2-07
Accessible design for self-service interactive devices

CAN/CSA-T515-97 (withdrawn)
Telecommunications — Telephone terminal equipment — Acoustic and magnetic field requirements for handset telephones intended for use by the hard of hearing

T516-02 (withdrawn)
Telecommunications — Telephone terminal equipment — Requirements for pay telephone keypads and function keys with particular regard to use by persons with disabilities

BSI (British Standards Institute)
BS5395 Part 1:2000
Stairs, ladders and walkways. Code of practice for the design, construction and maintenance of straight stairs and winders

ICC (International Code Council)
ICC/ANSI A117.1-2003
Accessible and Usable Buildings and Facilities

Δ **ISO (International Organization for Standardization)**
ISO 23599:12
Assistive products for blind and vision impaired persons — Tactile walking surface indicators

Transportation Association of Canada
Manual of Uniform Traffic Control Devices for Canada (1998)

Guidelines for Understanding, Use and Implementation of Accessible Pedestrian Signals (2008)

3 Definitions

The following definitions apply in this Standard:

Accessible — a site, building, and its facilities that can be approached, entered, and used by people, including those with physical, sensory, or cognitive disabilities.

Accessible route — a pedestrian path of travel within the interior or exterior environment that is without barriers, as defined in this Standard, and usable by all persons, including those with physical, sensory, or cognitive disabilities.

Alternative (alternate) format — information presented in Braille, in large print, on tape, or electronically (e.g., CD-ROM, diskette).

Amenity — anything that adds to a person's comfort or convenience.

Amenity zone — a designated area, adjacent or connected to an accessible route, that provides amenities and services (e.g., street furniture, mailboxes, telephones) and can include utilities such as light posts, hydrants, etc.

Blended transition — a connection with a slope of 1:20 (5%) or less between the level of a pedestrian walkway and the level of a crosswalk.

Cane-detectable — any object or a change in surface texture that falls within the detection range of a long white cane.

Channelization — the separation or regulation of movements into definite routes of travel.

Colour-contrast — a significant contrast in colour between the foreground and the background of an element, e.g., light on a dark background or dark on a light background (70% contrast between characters and the background is considered an appropriate contrast for people with low vision).

Crosswalk — that portion of a pedestrian crossing that is within the vehicular right-of-way.

Curb ramp — a sloped surface built into a curb.

Glare — the reflection from a surface.

Gutter — the sloped drainage area directly in front of a curb or curb ramp.

Illumination — the intensity of light, as measured in lux.

Intersection — a junction where two or more routes of travel (vehicular or pedestrian) meet or cross.

Passenger pick-up area — an area where pedestrians board and disembark road vehicles.

Pedestrian area — an area where pedestrian traffic is permitted.

Commentary:

It applies to both exterior and interior spaces and can include walkways, halls, corridors, and aisles, as well as open spaces such as lobbies, atria, malls, or parks.

Pedestrian crossing — the combination of crosswalk segments, curb ramps, or blended transitions, medians, and refuge islands that connect departure and arrival walkways across a vehicular right-of-way.

Pedestrian right-of-way — that portion of the public right-of-way that is dedicated to the unrestricted movement of persons.

Pedestrian route — a continuous and unobstructed path of travel within a pedestrian circulation area that provides accessibility.

Platform lift — an elevating device that is installed at a permanent location in a building structure and is used to transport persons with disabilities on a platform that moves between permanent levels.

Enclosed stair lift — an inclined lift where the platform runway is separate from the stair circulation space.

Enclosed vertical lift — a vertical lift with an enclosed platform runway.

Unenclosed stair lift — an inclined lift where the platform or chair runway is within the stair circulation space.

Unenclosed vertical lift — a vertical lift with a partially enclosed or unenclosed platform runway.

Public right-of-way — private property or public land, usually in interconnected corridors, that is acquired for or devoted to pedestrian and vehicular purposes.

Raised crossing — a crossing where the crosswalk is elevated between 80 and 150 mm above the adjacent road surface, with ramps on the approaches. It is designed to reduce speeds and draw attention to the crosswalk and the pedestrians, so that pedestrians can traverse the road safely.

Δ **Ramp** — a sloping walkway leading from one level to another, which has a running slope with a ratio steeper than or equal to 1:20 (5%).
Notes:
1) Walkways with a running slope shallower than 1:20 are not considered to be ramps in the context of this Standard. See Clause 5.5.1.
2) See also **Curb ramp**.

Raised intersection — a flat raised area that covers an entire intersection, with ramps installed on all vehicular approaches. The intersection is usually raised to the level of the sidewalk, or slightly below to provide a "lip" that is detectable by persons with a vision impairment.

Shared-use walkway — a path of travel, separate from a vehicular route, where pedestrians on foot and those using various types of mobility aids (e.g., manual or power wheelchairs, scooters, canes, long white canes, walkers, or crutches) share space with persons who use non-motorized items (e.g., skate boards, inline skates, bicycles).

Signal controlled intersection — an intersection where movement of pedestrians and vehicles is regulated by signals and designated signage installed by authorities having jurisdiction.

Signage — information provided in the form of visual and tactile communication that incorporates one or more of the following elements:
(a) alphanumeric symbols;
(b) pictograms;

(c) illustrations (plans, etc.); or
(d) Braille.

Sign controlled intersections — an intersection where movement of pedestrians and vehicles is regulated by designated signage installed by authorities having jurisdiction.

Slip lane/uncontrolled access ramp — a channelized vehicular route without stop controls that connects two vehicular rights-of-way.

Slope — the ratio of rise to run on an inclined surface.

Counter slope — the combined sum of the running slope of a curb ramp and of the gutter slope, in percentages.

Cross slope — the slope that is perpendicular to the direction of travel.

Gutter slope — the cross fall of the drainage area at the edge of the street directly in front of a curb ramp.

Running slope — the slope that is parallel to the direction of travel.

Splitter island — a flush or raised island that separates entering and exiting traffic (e.g., at a roundabout intersection).

Tactile markings — lettering or graphics that are slightly raised above the surface.

Tactile walking surface — a standardized surface, detectable underfoot or by a long white cane, to assist persons with low vision or blindness by alerting or guiding them.

Transfer space — an unobstructed area allowing the positioning of a wheelchair to enable a person to transfer to another adjacent seated position.

Vehicular right-of-way — that portion of the public right-of-way dedicated to the movement of motorized (mechanically propelled) vehicles for the transport of persons or goods. This includes roadways, transit ways, and rail lines.

Walk Interval — that phase of a traffic signal cycle during which a pedestrian is to begin crossing, typically indicated by a WALK message or the walking person symbol and its audible equivalent.

Wayfinding — a consistent use and organization of definite sensory cues in the environment used to guide a person from one point to another.

4 General requirements

Δ 4.1 Area allowances

To accommodate a single manual wheelchair user, a clear floor or ground area shall be

(a) at least 800 × 1350 mm for a stationary position (see Figure 1); and

(b) at least 1500 × 1500 mm for a U-turn (see Figure 2).

Commentary:

(1) This Standard deals with accessibility requirements of persons with various disabilities, including those who use crutches, a walker, a long white cane, or a service animal. Their spatial requirements may vary, but are included within the area allowance that accommodates a manual wheelchair.

(2) For both a forward and side approach for a wheelchair user, a clear area of at least 1200 × 1200 mm should be provided. Part of this area may be part of the knee clearance, where it is specified.

(3) Though the area allowance stated is for a manual wheelchair, many persons use powered mobility aids (e.g., power wheelchairs or scooters) that are often

longer and require more manoeuvring area. Where possible, especially in exterior locations, a larger clear area of at least 2250 × 2250 mm should be provided.

(4) Annex B provides dimensions for the needs of people using various mobility aids.

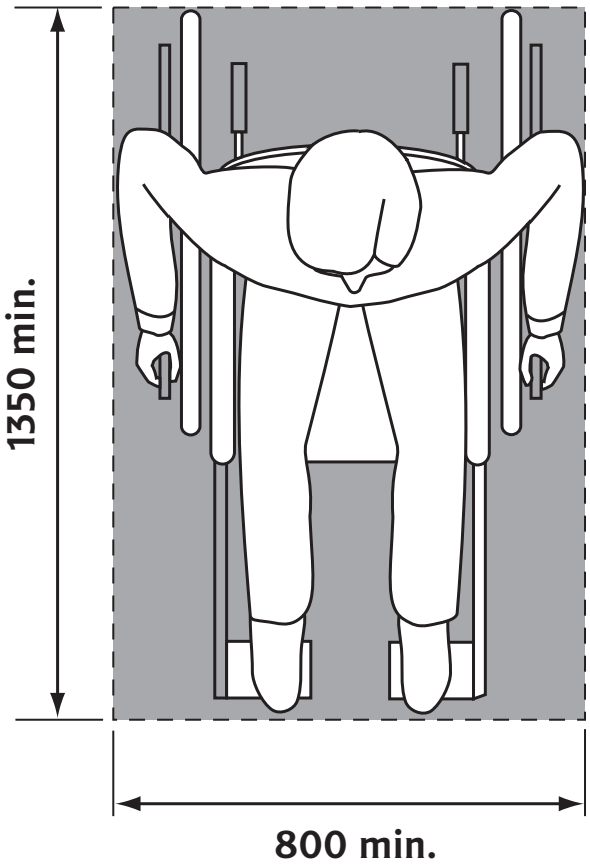

Δ **Figure 1**
Minimum floor area for a person using a manual wheelchair
(See Clause 4.1.)

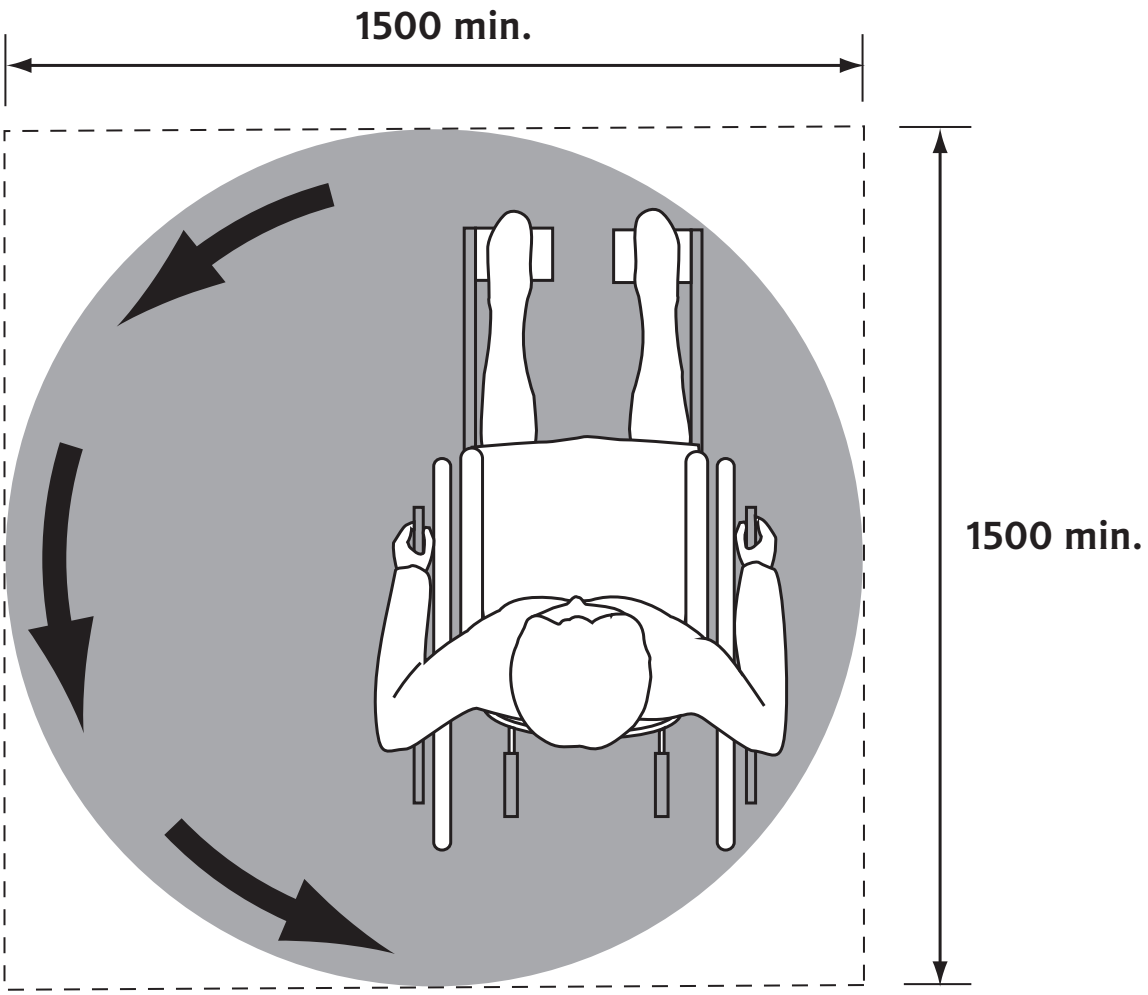

Figure 2
Minimum area at the toe level for a person using a manual wheelchair to make a U-turn
(See Clause 4.1.)

4.2 Operating controls

4.2.1 Scope

Operating controls include, but are not limited to,

(a) door handles and locks;
(b) window operators and locks;
(c) faucets and adjustable shower heads;
(d) electrical outlets and switches;
(e) thermostats;
(f) fire alarm pull stations; and
(g) activation devices.

Δ **4.2.2 Floor area**

Control shall be adjacent to, and centred on, either the length or the width of a clear floor space of 1350 mm by 800 mm.

Commentary:

A clear floor area of at least 1350 × 1350 mm in front of all operating controls provides for both a forward and a side approach.

4.2.3 Height

The centreline of the operating controls shall be located in a range between 400 and 1200 mm from the floor (see Figure 3).

Commentary:

For improved user access, at some locations the lower or upper limits may vary.

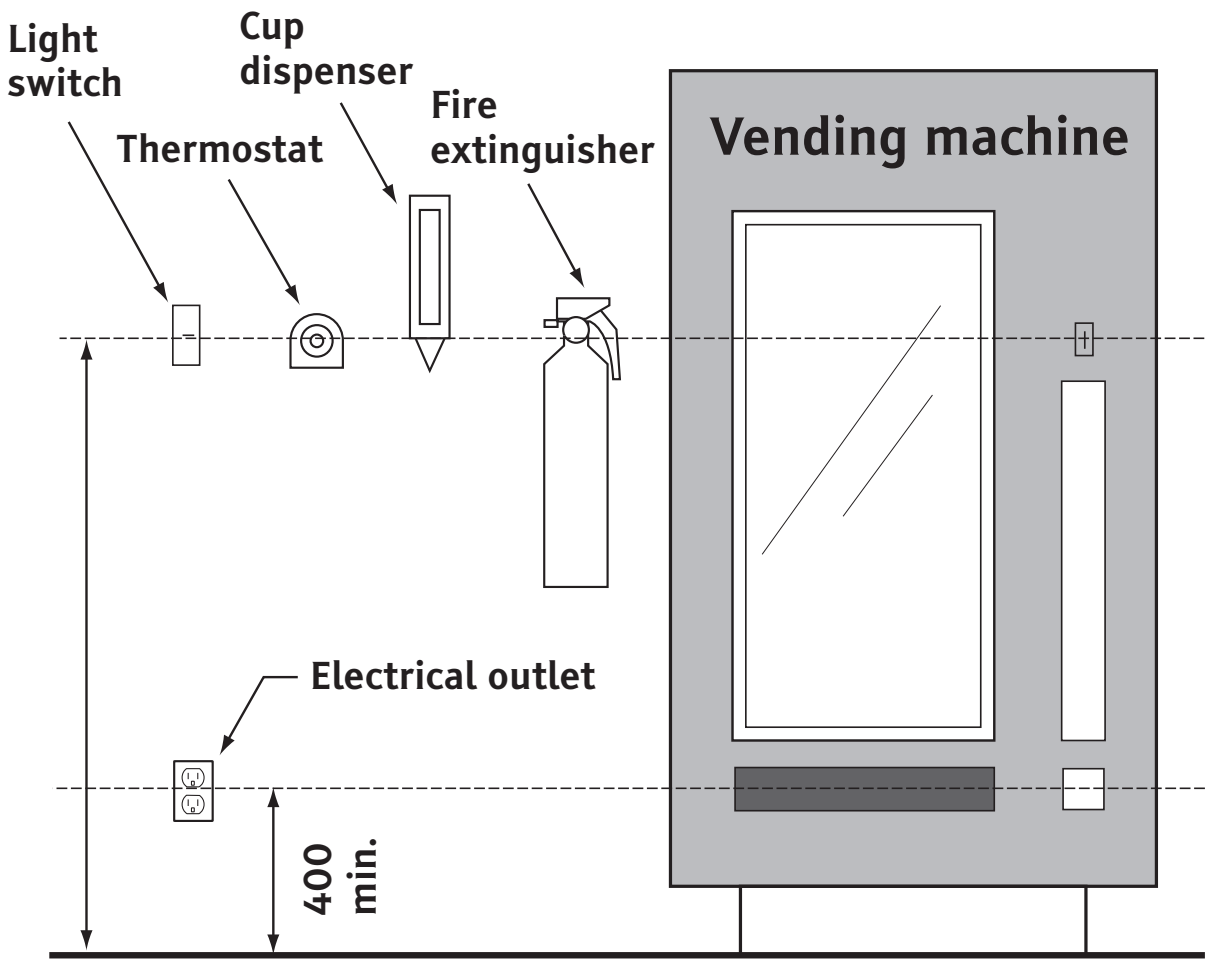

Figure 3
Height of operating controls
(See Clause 4.2.3.)

Δ **4.2.4 Operation**

Controls shall be operable

(a) with one hand, using
  (i) a closed fist position; or
  (ii) another method of operation that does not require tight grasping, pinching, or twisting of the wrist; and

(b) with a force not to exceed 22 N.

Commentary:

(1) Electronic controls may facilitate use by a wider range of persons.

(2) The requirement for operation by one hand does not preclude several operations, one after the other. The kind of situation to be avoided, for example, is a door lock that has to be turned with one hand while the door handle is simultaneously turned with the other hand.

(3) A control that needs to be read or adjusted should be angled in such a way that it is usable from a seated and a standing position.

4.2.5 Control devices

Control devices shall provide tactile and/or auditory information, indicating function and position of controls.

Commentary:

Controls with different shapes can help identify different functions.

4.2.6 Visual displays

Information on visual displays shall be

(a) supplemented by tactile and/or auditory information;

(b) colour-contrasted; and

(c) located on a glare-free surface.

4.2.7 Illumination

Operating controls shall be illuminated

(a) to a level of at least 100 lx; and

(b) where reading is necessary, to a level of at least 200 lx.

4.2.8 Colour contrast

The operating controls shall be colour-contrasted with their background.

4.3 Floor or ground surfaces

4.3.1 General

A floor or ground surface shall

(a) be stable and firm;
(b) be slip-resistant;
(c) produce minimal glare; and
(d) not be heavily patterned.

Commentary:

(1) Highly reflective surfaces can result in glare, which is a problem for many people.
(2) Annex C provides additional information on the potential for slip of various floor surfaces.

4.3.2 Changes in level

Changes in level, except for elevators, elevating devices, and curb ramps, shall comply with Table 1 (see Figure 4).

Table 1
Changes in level
(See Clauses 4.3.2 and 4.3.3.)

Vertical rise, mm	Profile
0–6	May be vertical [Figure 4(a)]
7–13	Bevelled, but not steeper than the ratio of 1:2 (50%) [Figure 4(b)]
Over 13	Not steeper than the ratio of 1:12 (8.33%) [Figure 4(c)]

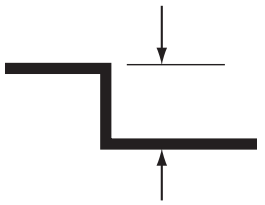

Change in level
up to 6

May be vertical

(a)

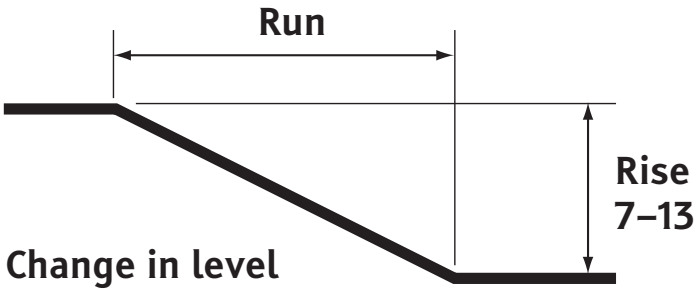

Change in level
7–13

Bevelled but not steeper
than 1:2 (50%) (ratio of rise to run)

(b)

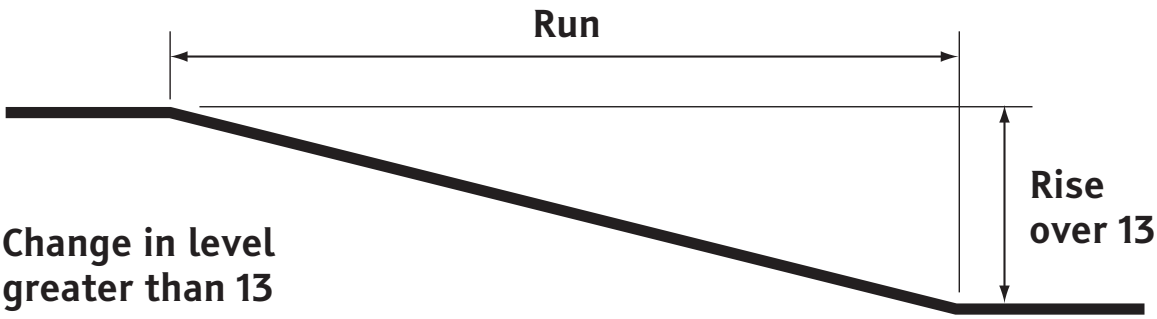

Change in level
greater than 13

Not steeper than 1:12 (8.33%)
(ratio of rise to run)

(c)

Figure 4
Changes in level
(See Clauses 4.3.2 and 5.2.6 and Table 1.)

4.3.3 Carpets

Carpets or carpet tile shall

(a) have a low, firm, and level pile or loop;
(b) have a combined carpet and pad height of not more than 13 mm;
(c) be securely fastened;
(d) have exposed edge trim complying with Table 1; and
(e) have a firm cushion, underpadding, or backing, where provided.

Commentary:

(1) New carpets can produce off-gassing, which can adversely affect people with environmental sensitivities. Suppliers can provide carpets that have been off-gassed prior to installation.
(2) Carpets without underpadding are preferred.

4.3.4 Gratings

Gratings located in pedestrian areas shall

(a) have openings not greater than 13 mm wide in one direction; and
(b) be placed so that the long dimension of the opening is perpendicular to the primary direction of travel.

Commentary:

Gratings should not be located in the accessible route.

4.3.5 Tactile walking indicator surfaces

4.3.5.1 Scope

Tactile walking indicator surfaces are used to inform persons who are walking over them of two possible situations:

(a) an attention indicator (truncated domes) signals a need for caution at a change in elevation, a vehicular route, train tracks, etc. [see Figure 5(a)]; and
(b) a direction indicator (linear bar surface) facilitates wayfinding in open areas and indicates a possible route that may be taken.

4.3.5.2 General

A tactile walking surface shall

(a) be installed in a manner that
  (i) avoids interference from an irregular walking surface; and
  (ii) does not create a tripping hazard;
(b) have its base surface level with the surrounding surface, or not more than 3 mm above or below it;
(c) be slip-resistant; and
(d) be colour-contrasted with the surrounding surface.

4.3.5.3 Tactile attention indicator surfaces

Δ **4.3.5.3.1 Configuration**

A tactile attention indicator surface shall be composed of truncated domes

(a) with a height of between 4 mm and 5 mm;
(b) with the top diameter between 12 and 25 mm and the base diameter 10 mm ± 1 mm greater than the top diameter;
(c) arranged in a square grid; and
(d) with a centre-to-centre distance of adjacent domes complying with Table 2 [see Figure 5(b)].

Δ **Table 2**
Dome diameter and spacing combinations
(See Clause 4.3.5.3.1.)

Top surface diameter (mm)	Base surface diameter (mm, ± 1 mm)	Centre to centre distance between domes (mm)
12	22	42–61
15	25	45–63
18	28	48–65
20	30	50–68
25	35	55–70

October 2015
(Replaces p. 18, May 2012)

Commentary:

Systematic research has shown that a top diameter of 12 mm is optimal for detection and discrimination underfoot.

4.3.5.3.2 Location

A tactile attention indicator surface shall be located at

(a) stairs, to comply with Clause 5.4.3;

(b) an unprotected drop-off edge, such as a transit platform, where
   (i) the change in elevation is greater than 250 mm; or
   (ii) the slope is steeper than in a ratio of 1:3 (33%);

(c) the unprotected edges of a reflecting pool;

(d) curb ramps, to comply with Clause 8.3.3; and

(e) an entry into a vehicular route or area where no curbs or other elements separate it from a pedestrian route [see Figure 5(a)].

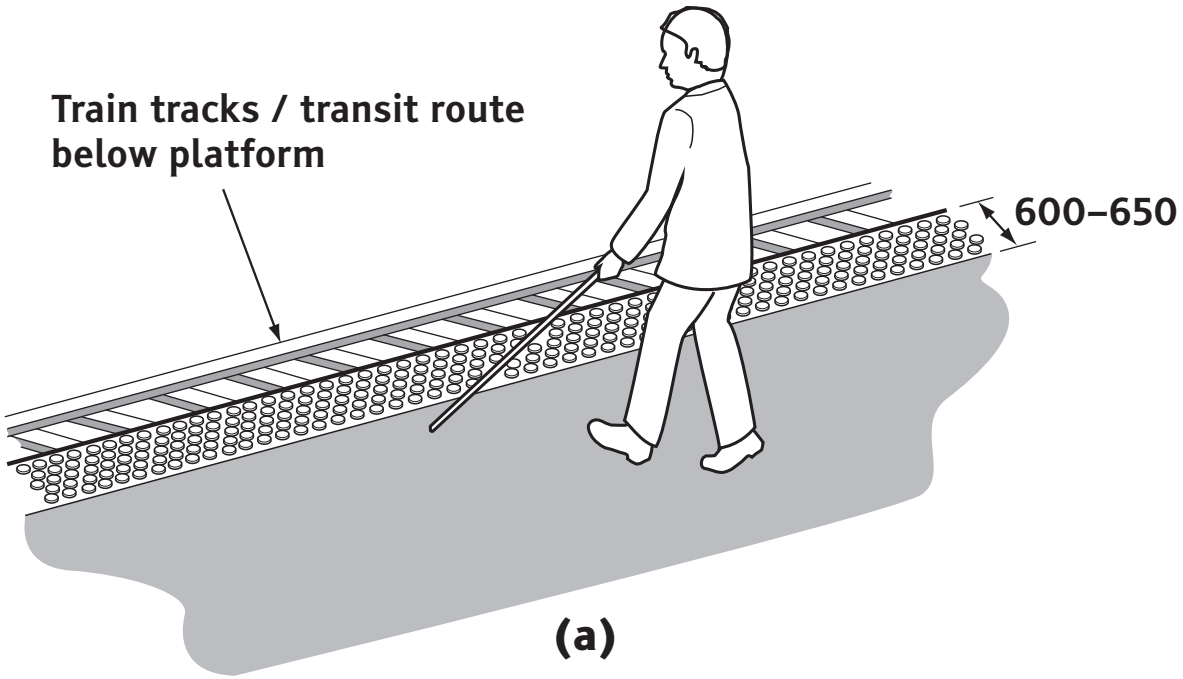

(a)

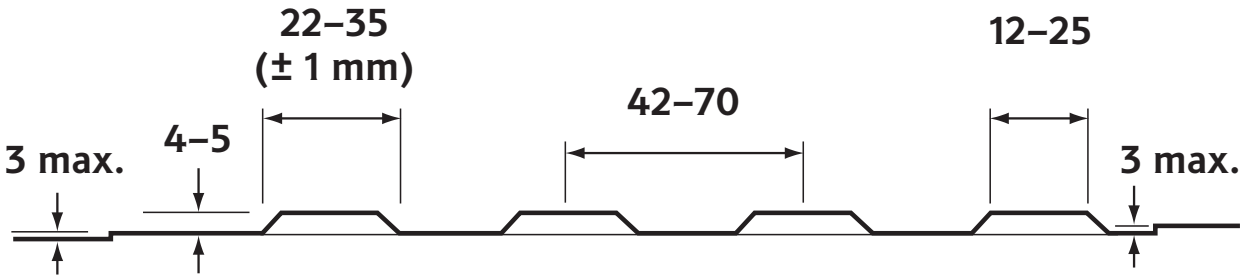

Note: Truncated domes are organized in a regular pattern.

(b)

Δ **Figure 5**
Tactile attention indicator surface
(See Clauses 4.3.5.1, 4.3.5.3.1, 4.3.5.3.2, and 5.4.3.1.)

Δ 4.3.5.3.3 Installation

A tactile attention indicator surface shall be

(a) installed along the full width of the hazard
  (i) to a depth between 600 and 650 mm; and
  (ii) with one long side against the edge of the hazard, unless otherwise indicated in this Standard; and

(b) in a colour that
  (i) contrasts at least 50% with the surrounding surface using the Michelson Contrast formula (see Clause 4.3.5.3.4); or
  (ii) if yellow, contrasts at least 40% with the surrounding surface.

Commentary:

(1) The specified visual contrast percentage of 50% is a minimum. It is preferable to provide a higher visual contrast whenever possible between the indicator surface and the surrounding surface.

(2) The color specifications for yellow should be
  (i) Munsell system: hue 5.0, chroma yellow 8.0/12;
  (ii) CIE 1931 system: 59.10% luminosity at the chroma coordinates of × = 0.4562 and y = 0.4788; or
  (iii) an equivalent.

Δ 4.3.5.3.4 Calculation of the luminance contrast value

The luminance contrast value (%) shall be calculated using the following formula, known as Michelson Contrast, C_M:

$$C_M = (L_1 - L_2) / (L_1 + L_2) \times 100$$

where

L_1 = the value of luminance on a lighter surface, expressed in cd/m^2;

L_2 = the value of luminance on a darker surface, expressed in cd/m^2

When luminance values are not available, but CIE Y values are available, the values Y_1 and Y_2 may be substituted for L_1 and L_2. Note that the CIE Y value is identical to the LRV.

When the CIE Y values or the LRVs of the two surfaces to be compared are known, these values may be used to determine the luminance contrast. Otherwise, a measurement of luminance or reflectance shall be used to determine the luminance contrast. For measurement methods, see IESNA HB-9-00 (referenced in Clause A.4 of this Standard).

Commentary:

Additional information on the calculation of luminance contrast can be found in Annex A of ISO 23599.

4.3.5.4 Tactile direction indicator surfaces

Δ **4.3.5.4.1 Configuration**

A tactile direction indicator surface shall be composed of flat-topped, parallel, elongated bars having

(a) a height of 4 mm to 5 mm;
(b) a top width between 17 and 30 mm and a base width 10 mm ± 1 mm greater than the top width;
(c) a centre-to-centre distance of adjacent bars to comply with Table 3;
(d) a top length not more than 270 mm and the base length 10 ± 1 mm greater than the top length; and
(e) not more than a 30 mm space between the ends of parallel bars [see Figure 6(b)].

Δ

Table 3
Bar width and spacing combinations
(See Clause 4.3.5.4.1.)

Width of flat-topped elongated bars, mm	Base width spacing, mm (± 1 mm)	Centre-to-centre distance between elongated bars, mm
17	27	57–78
20	30	60–80
25	35	65–83
30	40	70–85

Commentary:

(1) Tactile direction indicator layout that is as continuous as possible is the easiest to follow.

(2) Systematic research has shown that flat-topped elongated bars with a top width of 17 mm are optimal for detection and discrimination underfoot.

4.3.5.4.2 Location

Tactile direction indicators should be located in large open floor areas, such as shopping malls or transportation terminals, to facilitate wayfinding by indicating the primary routes of travel. Annex A contains additional information about wayfinding.

The indicated routes should lead from the entrance to major destinations, such as an information kiosk, registration desk, stairway, elevator, or to store or service doors [see Figure 6(a)].

Δ

4.3.5.4.3 Installation

A tactile direction indicator shall

(a) where installed to define a route,
   (i) be between 250 and 300 mm wide;
   (ii) have a clear space at least 600 mm on each side; and
   (iii) have the elongated bars running in the direction of the route of travel;

(b) where installed across a route as an indicator of a facility or diverging route,
   (i) be between 600 and 650 mm wide; and
   (ii) have the elongated bars running in the direction toward the facility or diverging route;
(c) where there is a risk of water ponding, have the elongated bars interrupted by a drainage gap between 20 and 30 mm wide;
(d) have a colour-contrast of at least 50% with the surrounding surface; and
(e) not be yellow.

Commentary

(1) See Clause 4.3.5.3.3 for the method for calculating colour contrast.
(2) The specified visual contrast percentage of 50% is a minimum. It is preferable to provide a higher visual contrast whenever possible between the indicator surface and the surrounding surface.
(3) A tactile attention indicator surface may be used at the intersection of two routes to alert users to the presence of the intersection.
(4) The clear space on either side of the tactile direction indicator surface should be smooth, to provide a contrast with the tactile indicator surface.

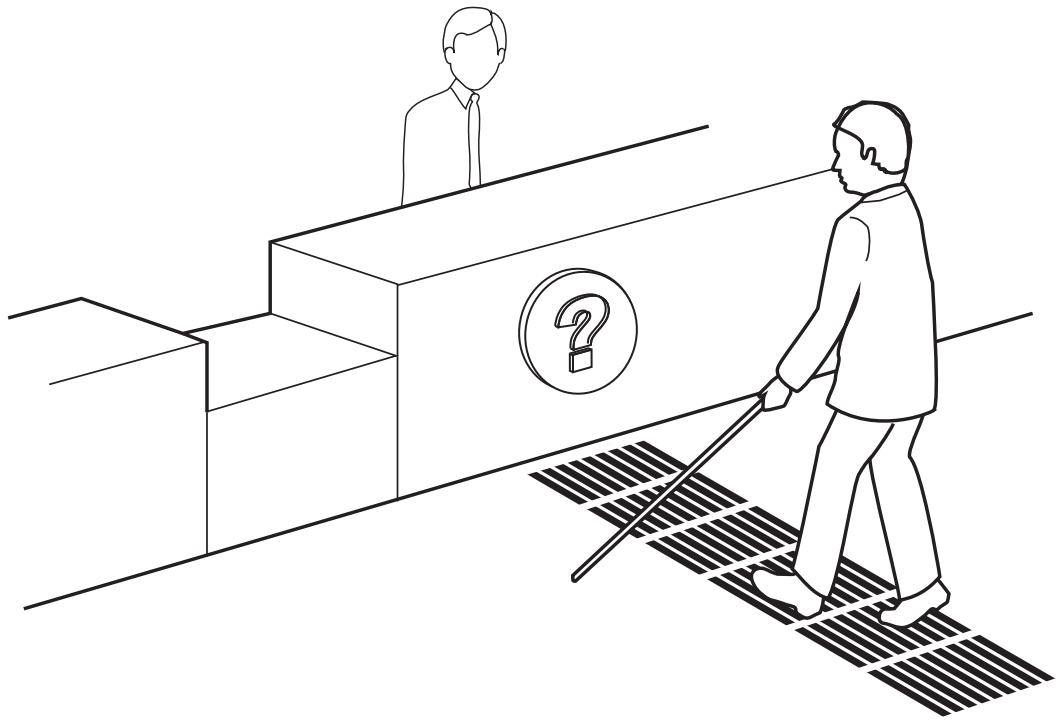

(a)

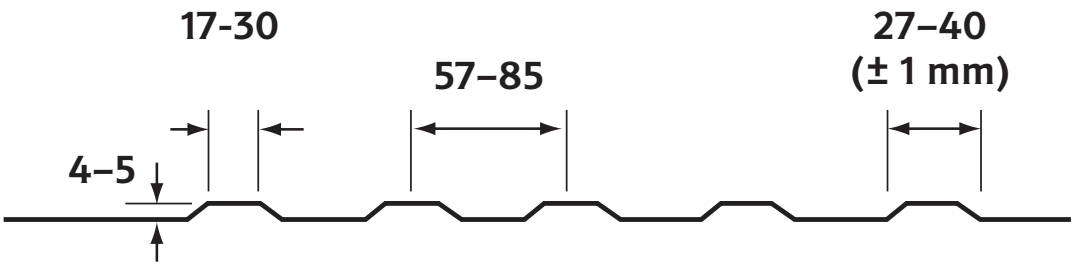

Note: Raised strips are parallel to the direction of travel.

(b)

Δ **Figure 6**
Tactile direction indicator surface
(See Clauses 4.3.5.4.1 and 4.3.5.4.2.)

4.4 Protrusion hazards

4.4.1 Protruding objects

In pedestrian areas, objects protruding more than 100 mm from walls, columns, or free-standing supports shall either

(a) be cane-detectable at or below 680 mm from the floor; or

(b) have their undersides at a height of at least 2030 mm from the floor [see Figure 7(a), (b), (c), and (d)].

Commentary:

(1) Pedestrian areas include walkways, halls, corridors, and aisles, as well as open spaces such as lobbies, atria, malls, plazas, or parks.

(2) Protruding objects are potentially hazardous to persons with visual impairments, unless they are located within the detection range of a long white cane. Persons using a cane can detect objects if their lowest leading edge is at or below 680 mm from the floor.

(3) Examples of protruding obstructions include signs, telephone enclosures, drinking fountains, fire extinguishers, or the underside of stairways or escalators (see Figure 8).

(4) Recessing an object avoids creating a protrusion hazard.

4.4.2 Width maintenance

Protruding objects shall not reduce the clear width required for an accessible route or manoeuvring space [see Figure 7(b)].

4.4.3 Headroom

Δ **4.4.3.1 Height**

Except at doorways, in pedestrian areas the clear headroom shall be at least 2050 mm from the floor [see Figure 7(a) and (c)].

Commentary:

While a doorway height of 2050 mm is preferred, a height of 1980 mm may be used.

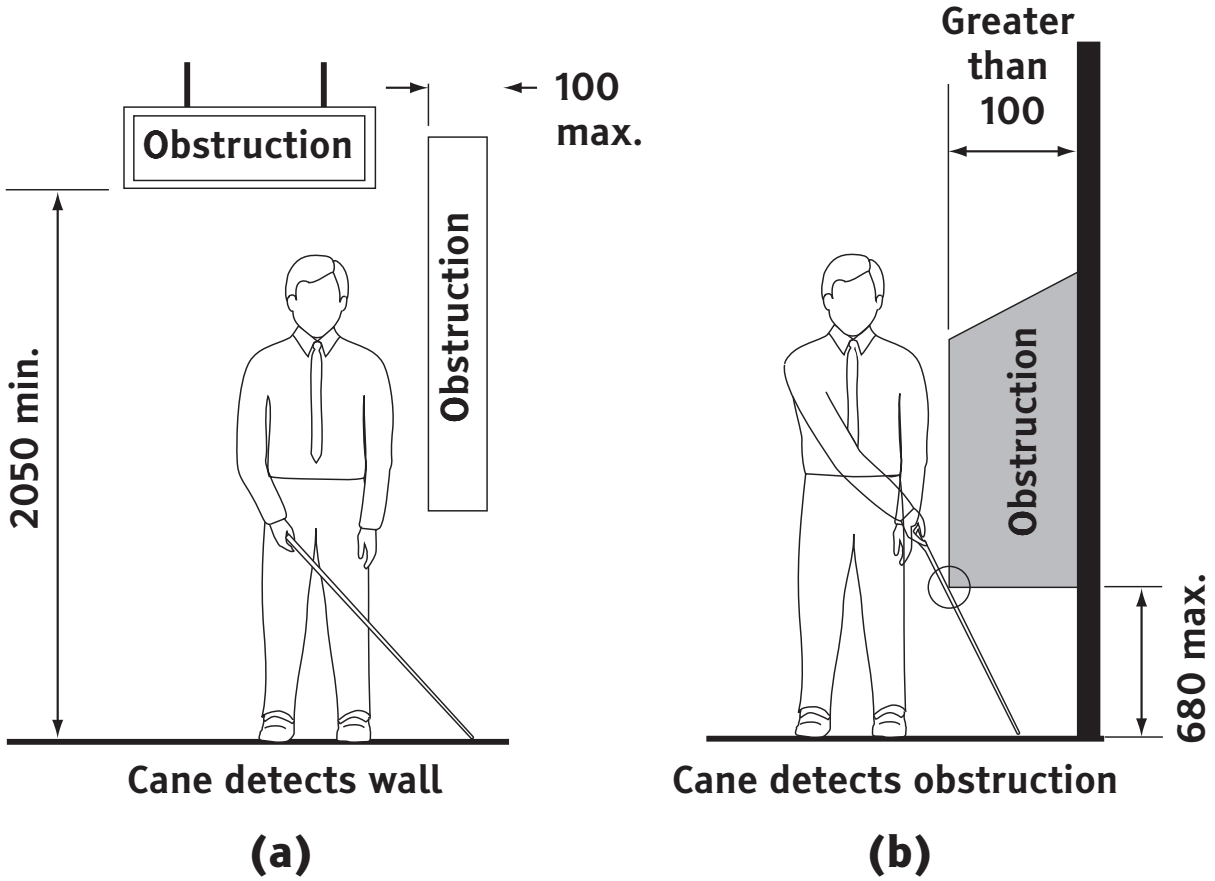

Δ

Figure 7
Limits of protruding objects
(See Clauses 4.4.1, 4.4.2, and 4.4.3.1.)

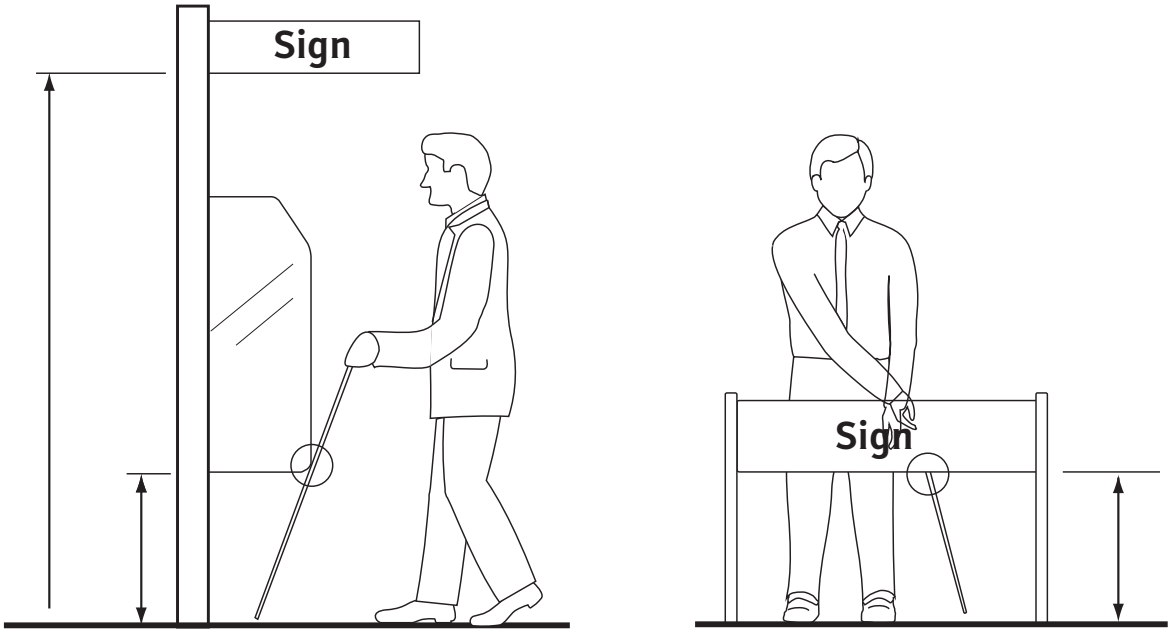

Cane detects obstruction

(c)

Cane detects obstruction

(d)

Figure 7 (Concluded)

4.4.3.2 Overhead hazards

Where the headroom in a pedestrian area is reduced to less than 2030 mm from the floor, a guardrail or other barrier shall be provided with its leading edge at or below 680 mm from the floor (see Figure 8).

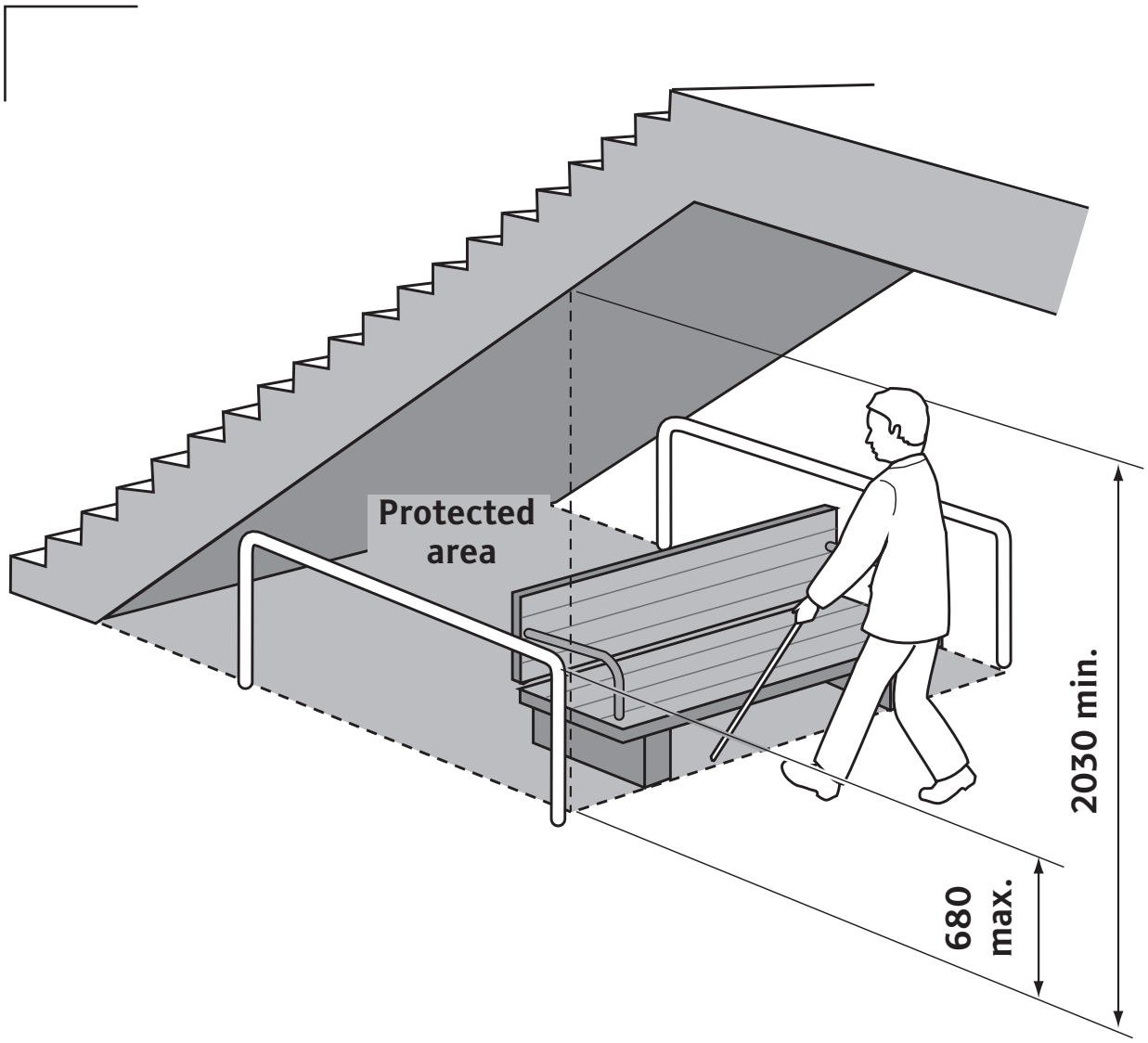

Figure 8
Overhead hazards
(See Clauses 4.4.1 and 4.4.3.2.)

4.5 Signage

4.5.1 Location

Where signage, including electronic displays, is provided, it shall be
(a) consistently located; and
(b) positioned to avoid shadow areas and glare.

Commentary:

(1) In addition to these general signage requirements, specific signage is covered under Clauses 6.6.2 and 9.4.
(2) Signage, including electronic displays, should be placed at decision-making points along routes of travel, including exits and entrances.
(3) Consistent locations include height considerations for overhead or wall-mounted signs, as well as uniform placement of identification signs for facilities and services.
(4) People might have a limitation in moving their head or a reduction in peripheral vision. Signs facing the direction of travel are easiest to notice and read.
(5) Vertical wording and electronic scrolling signage should be avoided. Where scrolling signage has to be used, characters and symbols should move slowly across the screen.

4.5.2 Configuration of signs

Where signage, including electronic displays, is provided, it shall
(a) have a glare-free surface;
(b) be of uniform design;
(c) when used to give the same type of information within the same facility, be consistently shaped, coloured, and positioned; and
(d) be colour-contrasted with its background.

4.5.3 Characters

On signs, letters and numerals shall
(a) be sans serif;
(b) have Arabic numbers;

(c) have a width-to-height ratio between 3:5 and 1:1;
(d) have a stroke-width-to-height ratio between 1:5 and 1:10;
(e) be colour-contrasted by at least 70% with its background (see Figure 9);
(f) have the character height relative to the intended viewing distance comply with Table 4; and
(g) use an upper case "X" for character measurement.

Table 4
Character height relative to viewing distance
(See Clause 4.5.3.)

Minimum character height, mm	Maximum viewing distance, mm
25	750
50	1500
75	2250
100	3000
150	4500
200	6000
250	7500
300	9000

Commentary:

(1) Nearsighted persons might have to approach much closer to read a sign than persons with average visual acuity. Signs at eye level allow persons to get closer to the sign.
(2) Any writing should be at least a 14 point font size.
(3) Lower case lettering is generally easier to read than capital letters. A mixture of upper case and lower case letters (e.g., "Canada") can be more easily read and recognized.

(4) Where the background colour of a sign does not contrast significantly with the surrounding surface, a contrasting border should be used around the sign.
(5) Illuminated signs with letters such as red, green, or blue should not be used on a black background.
(6) Examples of colours that contrast more than 70% are navy blue with matte white (95%), apple green with white (72%), and silver with saddle brown (70%).
(7) Colour combinations that should be avoided include yellow/grey, yellow/white, blue/green, red/green, black/violet, and red/black.

4.5.4 Pictograms and symbols

Pictograms and symbols shall be colour-contrasted by at least 70% with their background.

4.5.5 Illumination

The level of illumination on signs shall be at least 200 lx.

4.5.6 Tactile signs

4.5.6.1 General

Tactile markings shall supplement the text of
(a) regulatory signs, such as prohibition and mandatory signs;
(b) warning signs, such as caution and danger signs; and
(c) identification signs, such as rooms, titles, names, or numbers.

Commentary:

(1) Prohibition signs denote an order forbidding an action, while mandatory signs denote an order requiring an action.
(2) Caution signs denote a potential hazard, while danger signs denote a definite hazard.
(3) Identification signs denote general orientation or specific information, such as at washrooms, routes of egress, stairwells, doorways, or offices.

(4) Overhead signs do not have to be tactile since they cannot be reached for touching.

4.5.6.2 Tactile characters

On tactile signs, letters and numerals shall be

(a) raised between 0.8 and 1.5 mm above the surface (see Figure 10);
(b) sans serif;
(c) 16 to 50 mm in height;
(d) accompanied by Grade 1 Braille near the bottom edge of the sign; and
(e) colour-contrasted with their background by at least 70%.

4.5.6.3 Pictograms and symbols

On tactile signs, pictograms and symbols shall be

(a) raised between 0.8 and 1.5 mm above the surface;
(b) at least 150 mm in height;
(c) accompanied by the equivalent description in Grade 1 Braille, un-contracted and placed directly below the pictogram or symbol; and
(d) colour-contrasted with their background by at least 70%.

4.5.6.4 Location of tactile signs

A tactile sign shall

(a) if used to identify a door, be mounted on the wall beside the latch edge of the door;
(b) where applicable, have the leading vertical edge 150 ± 10 mm from the door jamb (see Figure 10);
(c) where double-leaf doors are used or no wall space adjoins the door's latch edge, be mounted on the nearest adjacent wall;
(d) allow a person to approach the sign to within 100 mm without encountering protruding objects or standing within a door swing;
(e) be mounted with the horizontal centreline 1500 ± 25 mm from the floor; and
(f) have a clear wall area around the sign at least 75 mm wide.

4.5.7 Symbol of accessibility

Where a facility or its elements are required to be identified as accessible, the International symbol of access shall be used (see Figures 11 and 12).

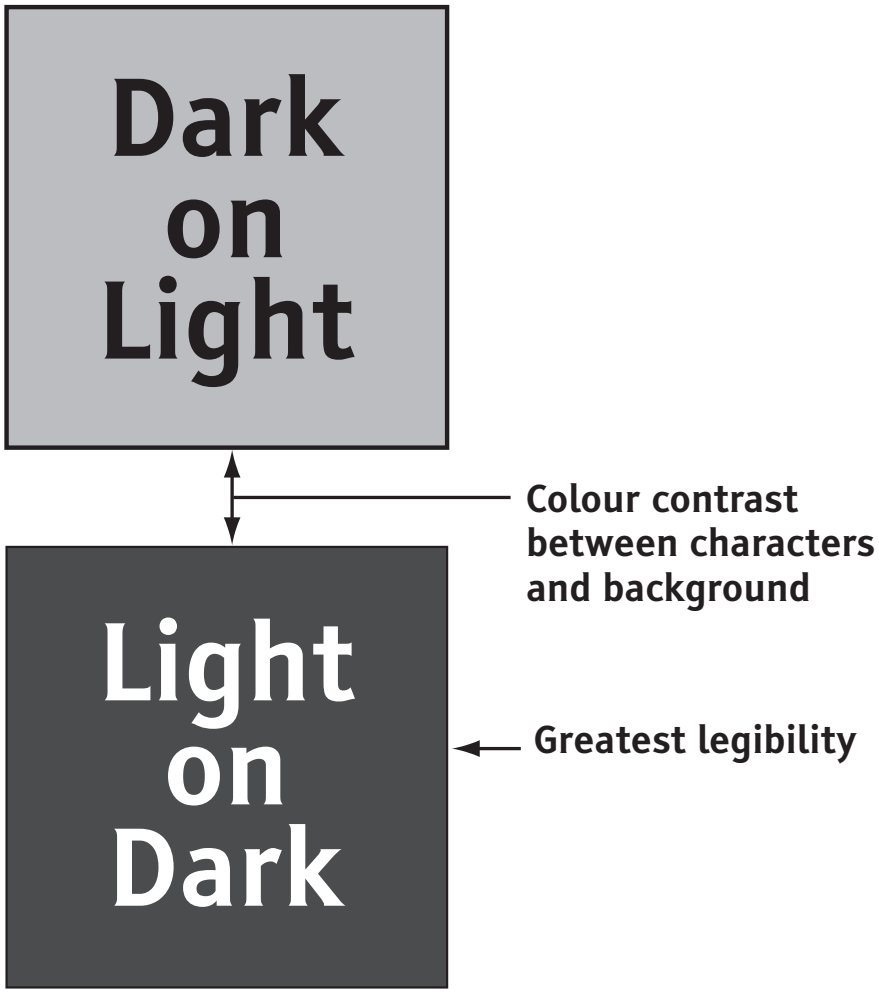

Figure 9
Legibility of printed characters
(See Clause 4.5.3.)

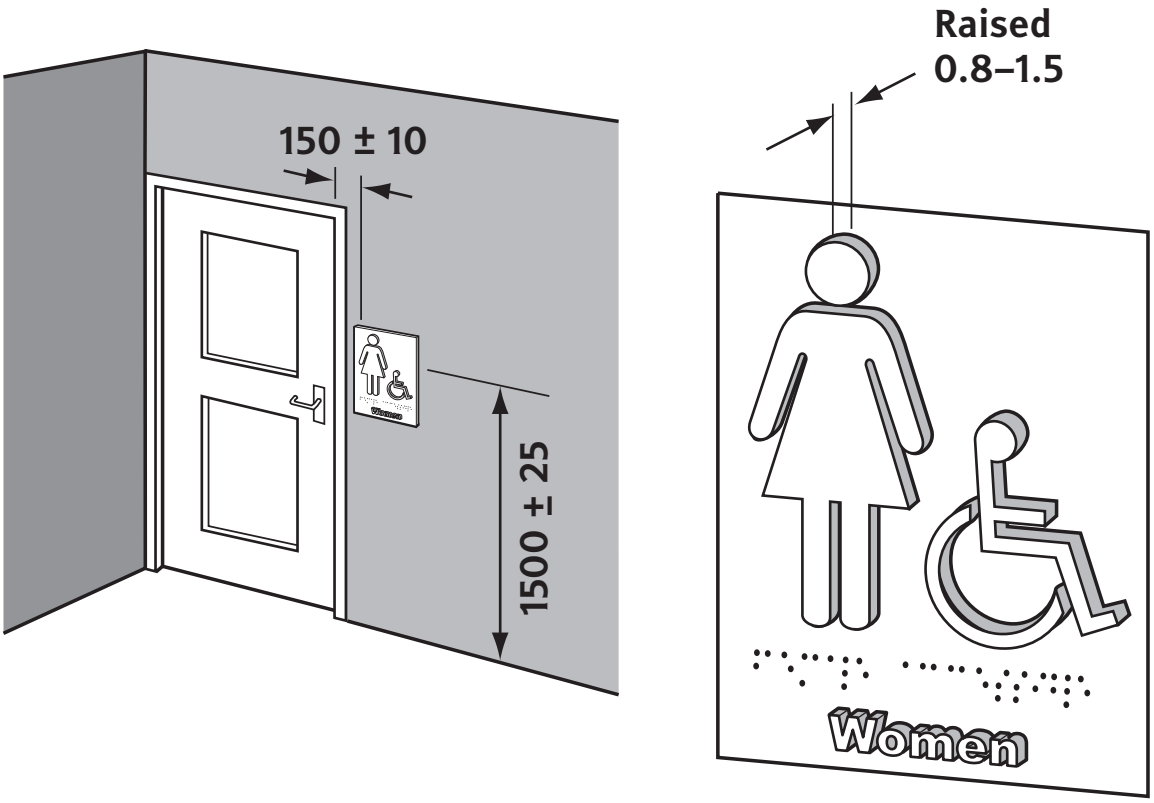

Figure 10
Location and size of tactile signs
(See Clauses 4.5.6.2 and 4.5.6.4.)

Figure 11
International symbol of access
(See Clauses 4.5.7, 5.2.3, 6.3.1, and 9.4.)

Figure 12
Examples of service identification signs incorporating the International symbol of access
(See Clauses 4.5.7 and 6.3.1.)

5 Interior circulation

5.1 Accessible routes

5.1.1 Width

The clear width of accessible routes shall be at least 920 mm with the following exceptions:

(a) for short indentations up to 600 mm in length, it shall be at least 810 mm [see Figure 13(a)];

(b) for doorways, it shall be at least 810 mm, though additional manoeuvring space is sometimes required (see Clause 5.2);

(c) for U-turns around an obstacle less than 1200 mm wide, it shall be at least 1100 mm (see Figure 15); and

(d) in high traffic areas, it shall be at least 1500 mm [see Figure 13(b)].

Commentary:

(1) Routes should be at least 1500 mm wide to allow persons using mobility aids to pass.

(2) In a route around an obstacle greater than 1200 mm wide, cutting the corners of the obstacle will provide additional manoeuvring space.

(3) The minimum width for checkout lanes should be 920 mm (see Figure 14).

(4) Walls at the end of corridors should be contrasted in colour or brightness with the other walls and floor. Where windows are located at the end of a corridor, means should be used to minimize glare.

(5) Convex mirrors should be installed near the ceiling at all hallway intersections for viewing oncoming pedestrians.

5.1.2 Slope

Accessible routes shall

(a) have a running slope not exceeding the ratio of 1:20 (5%);

(b) where necessary for a slope to exceed the ratio of 1:20 (5%), be designed as

  (i) a ramp complying with Clause 5.5; or

  (ii) a curb ramp complying with Clause 8.3.3; and

(c) have a cross slope not exceeding the ratio of 1:50 (2%).

Commentary:

For long routes of travel, resting areas should be provided at frequent intervals (approximately 30 m) and should be located off the route of travel.

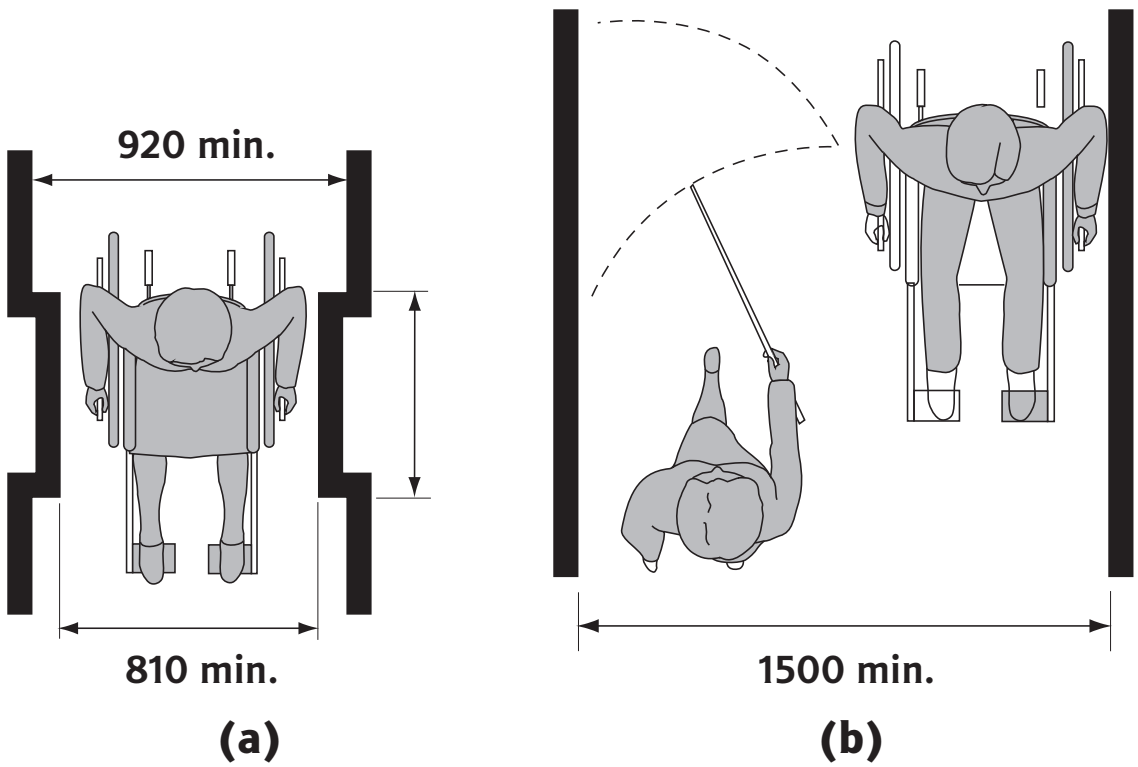

Figure 13
Width of interior accessible routes
(See Clause 5.1.1.)

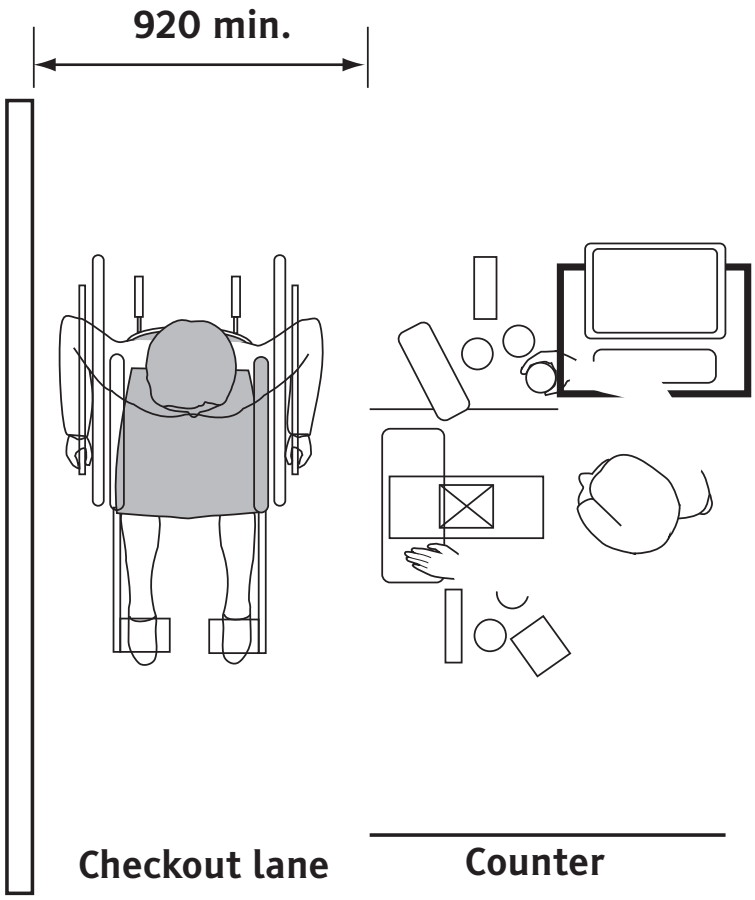

Figure 14
Width of accessible checkout lanes
(See Clause 5.1.1.)

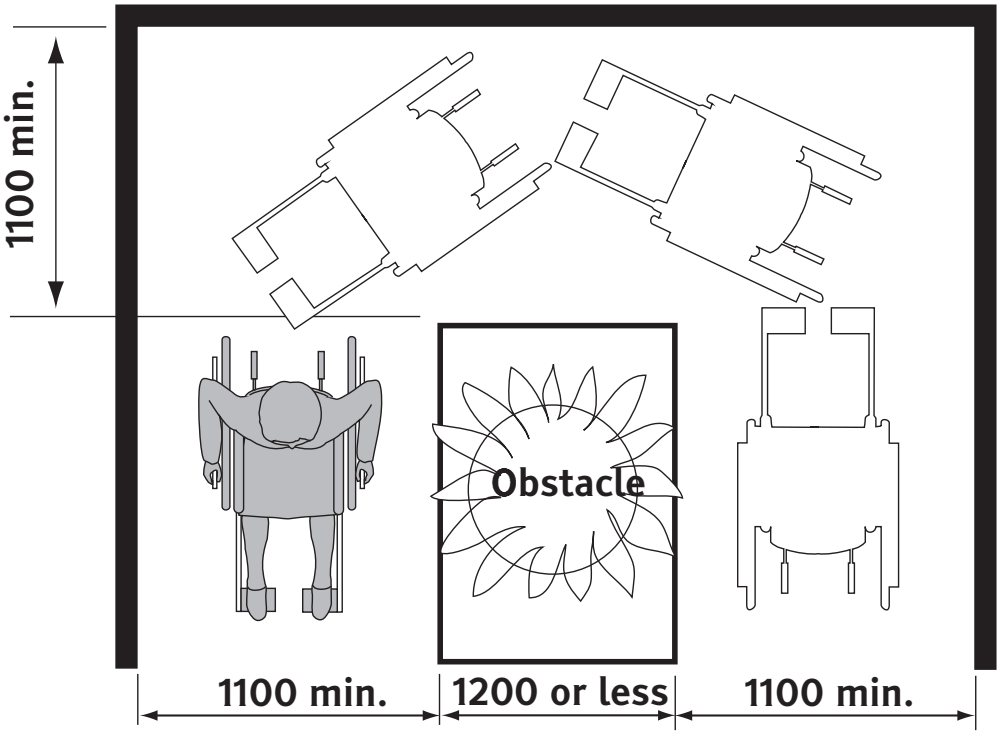

(a)

Figure 15
Width of accessible route around an obstacle
(See Clause 5.1.1.)

(Continued)

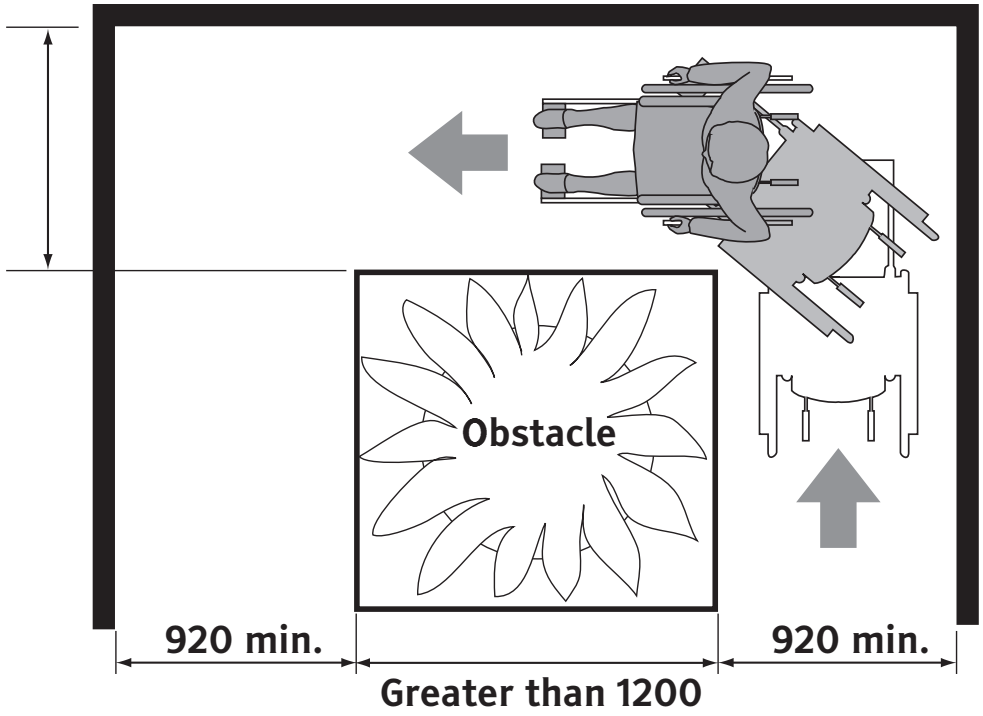

(b)

Figure 15 (Concluded)

5.1.3 Lineup guides

Lineup guides shall

(a) be separated by a clear width of at least 920 mm (see Figure 16);
(b) have a clear floor area of at least 1500 × 1500 mm where lineups change direction and where they begin and end;
(c) be cane-detectable at or below 680 mm from the floor;
(d) be stable and not move easily;
(e) be colour-contrasted with their surroundings; and
(f) have a glare-free finish.

Commentary:

(1) The floor area is required to provide adequate manoeuvring space throughout the lineup process.

(2) A floor surface that is texture- and colour-contrasted with the surrounding surface can help to define the lineup area.

(3) Many people appreciate seating provided near the lineup location.

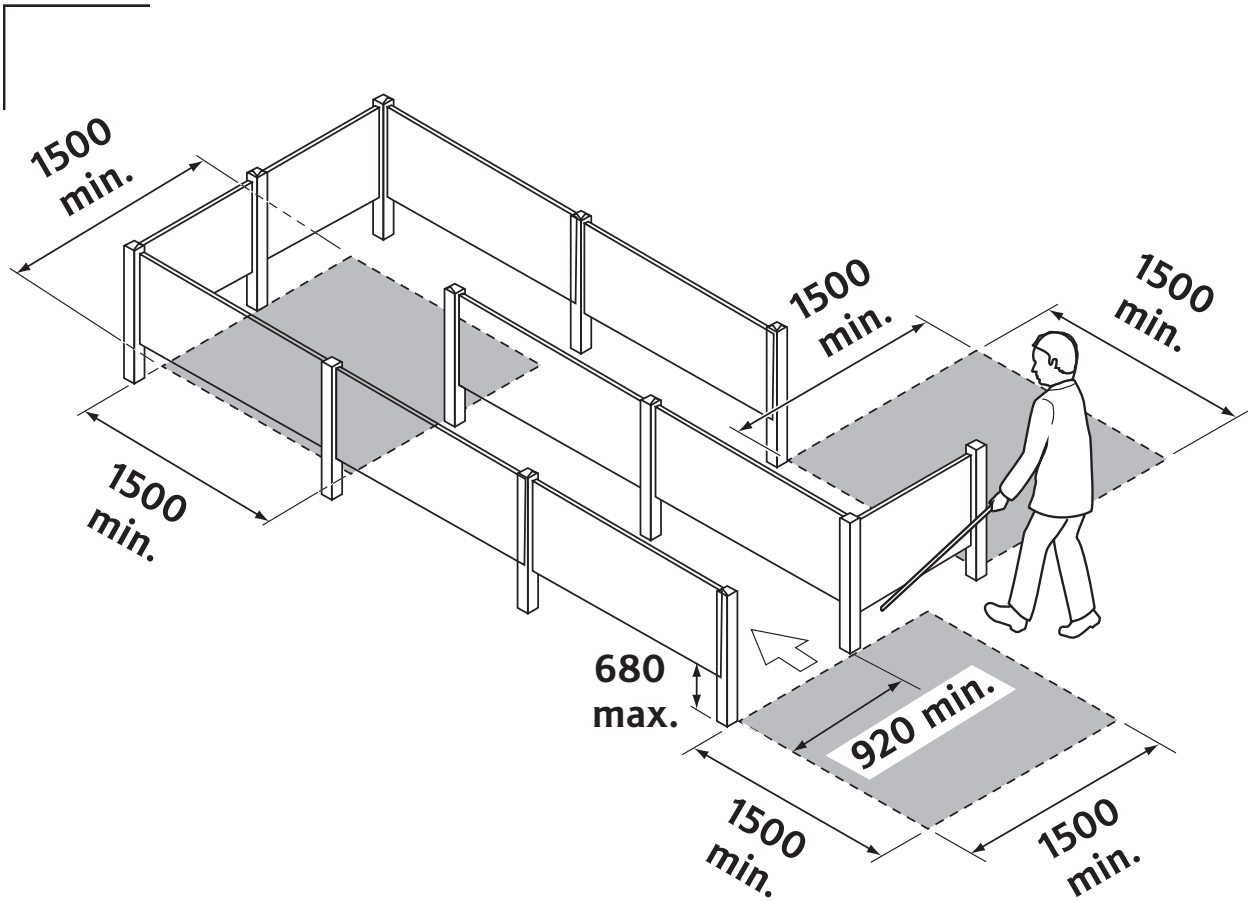

Figure 16
Lineup area
(See Clause 5.1.3.)

5.1.4 Safety

Accessible routes shall

(a) have surfaces that comply with Clause 4.3;
(b) comply with Clause 4.4 where protrusions exist; and
(c) comply with Clause 5.3 where handrails are provided.

Commentary:

Accessible egress routes should be kept unobstructed at all times.

5.2 Doors and doorways

5.2.1 Opening width

The clear opening width of a doorway shall be at least 810 mm

(a) for swinging doors, when measured between the face of the door or the panic hardware and the face of the stop with the door open 90° [see Figures 17(a), (b), and (c)]; and
(b) for sliding doors, when measured between the edge of the open door and the door frame [see Figure 17(d)].

Commentary:

(1) In a typical installation, a door with a width of 900 mm is required to achieve this clearance.
(2) In existing buildings, swing-clear hinges can often be used to increase the clear opening without enlarging the frame [see Figure 17(b)]. When open, such hinges move the door behind its frame, thereby increasing the clear opening width.

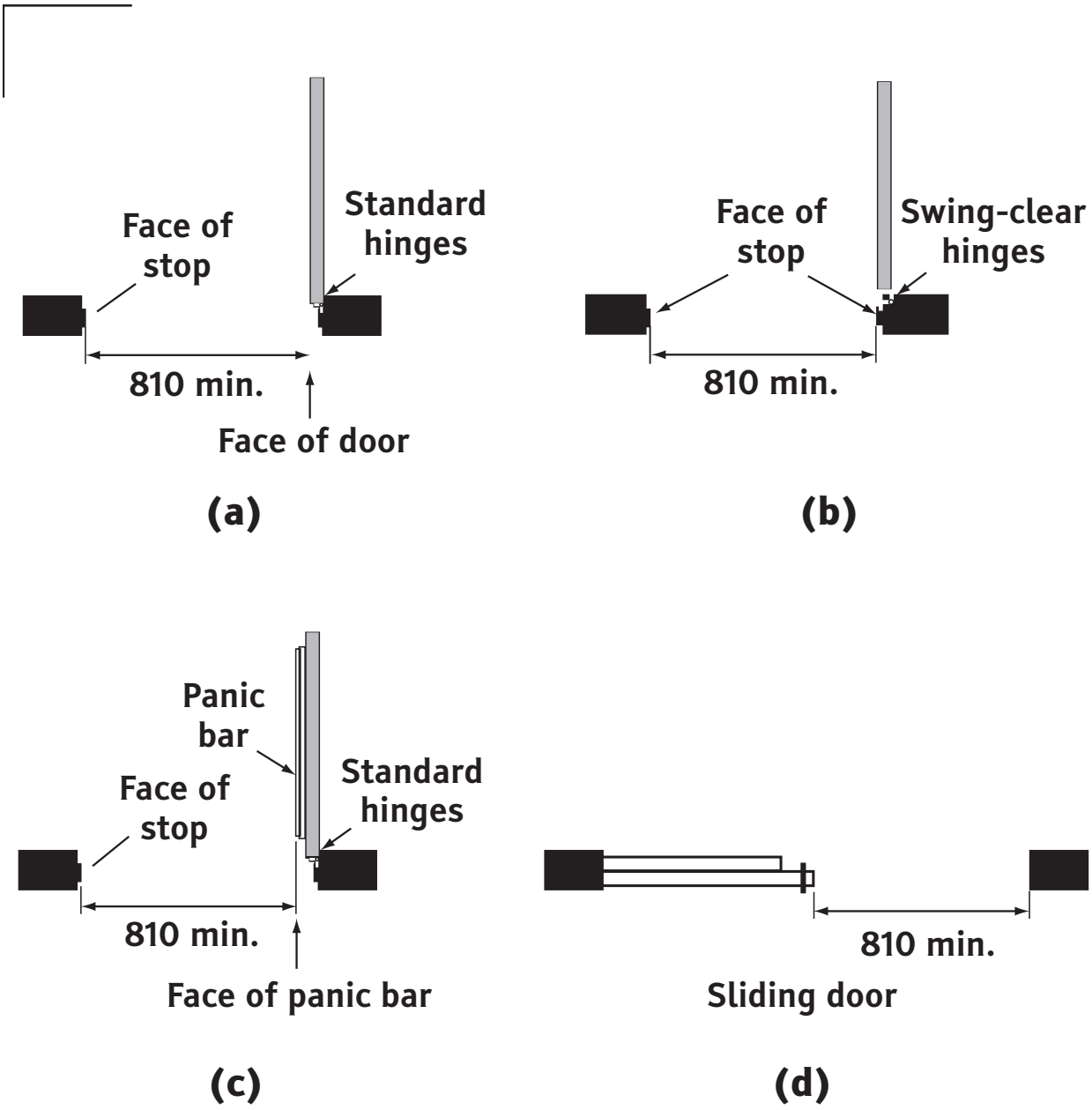

Figure 17
Clear opening width of doorway
(See Clause 5.2.1.)

5.2.2 Manoeuvring area at doors

Doorways shall have

(a) a level manoeuvring area on the push and pull sides of a door;

(b) except on the inside of a closet, a clear floor area beside the latch edge (that extends the full height of the door) complying with Table 5 (see Figure 18); and

(c) the width of the clear floor area (as specified in Table 5), measured from the inside of the door frame.

Commentary:

(1) The additional floor area at the latch edge of the door is required so that a person in a wheelchair or with a service animal can approach the door, activate the door handle, swing the door open, and pass through it without having to back up while opening the door.

(2) Where a door leads to a ramp landing, an additional area might be required (see Clause 5.5).

(3) The dimensions specified in Table 5 are for manual wheelchairs. Larger areas might be required for larger mobility aids such as scooters and power wheelchairs.

Table 5
Manoeuvring area at doors
(See Clause 5.2.2.)

Context	Clear floor area required, mm		Distance from door opening measured at the latch edge, mm
	Depth	Width	
Swinging door			
Front approach [Figure 18(a)]			
Pull side	1500	1500	600
Push side	1200	1200	300
Latch edge approach [Figure 18(b)]			
Pull side	1200	1500	600
Push side	1050	1500	600
Hinge edge approach [Figure 18(c)]			
Pull side	1500	1500	600
Push side	1050	1350	450
Sliding door [Figure 18(d)]			
Front approach	1200	900	50
Side approach	1050	1350	540

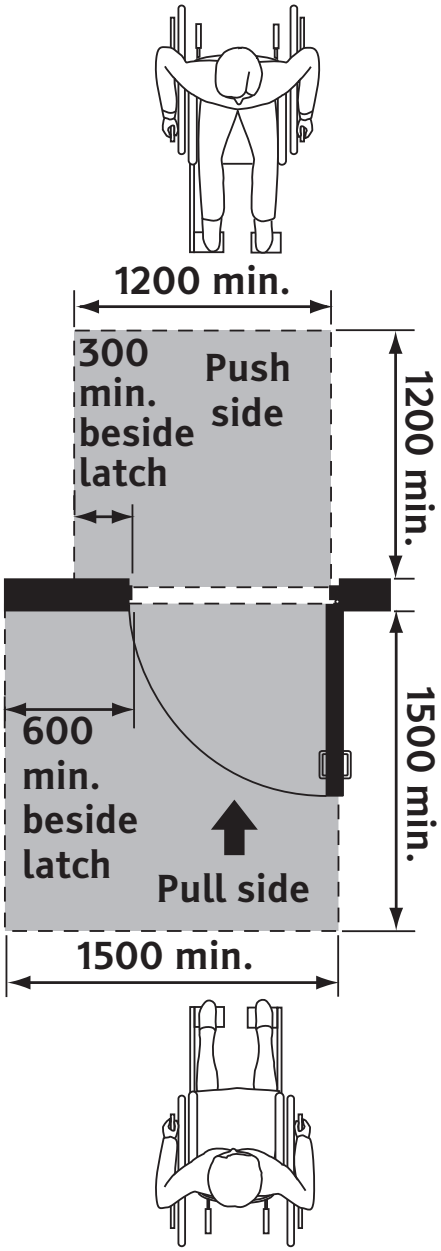

(a) Front approach at swinging door

Figure 18
Manoeuvring area at doors
(See Clause 5.2.2 and Table 5.)

(Continued)

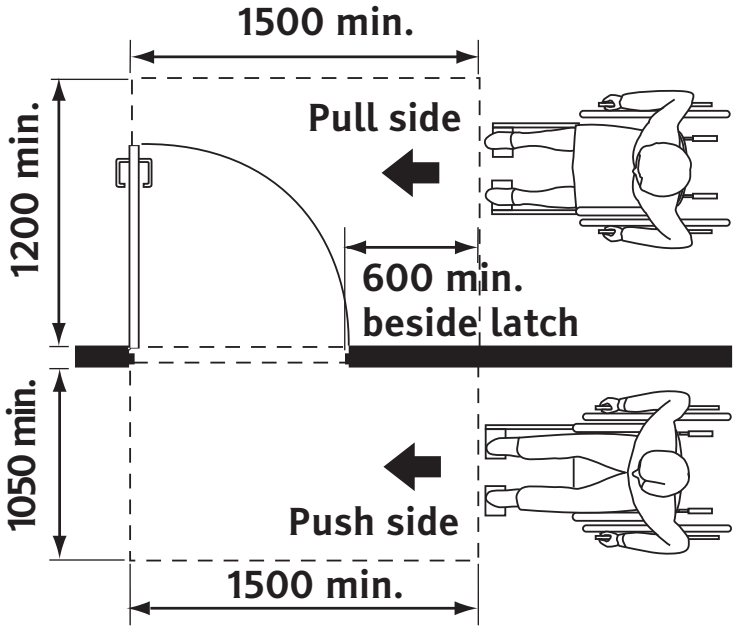

(b) Latch edge approach at swinging door

Figure 18 (Continued)

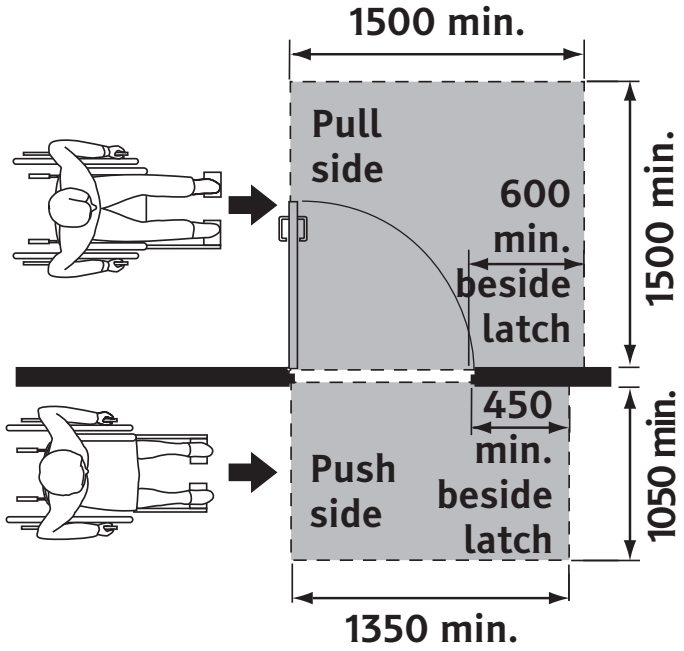

(c) Hinge edge approach at swinging door

Figure 18 (Continued)

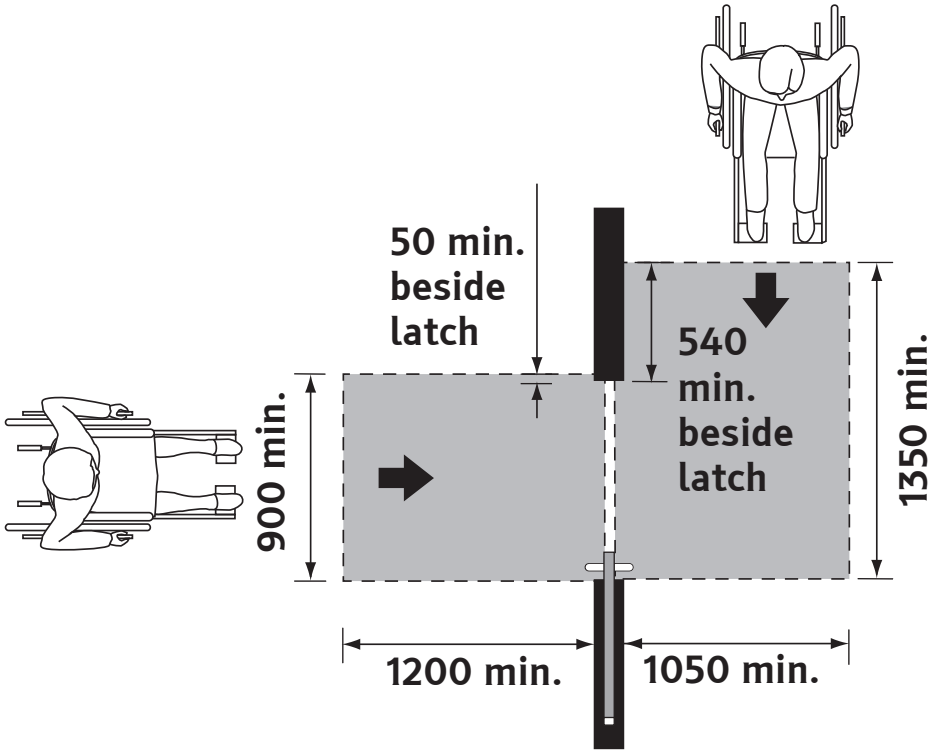

(d) Approach at sliding door

Figure 18 (Concluded)

5.2.3 Multiple-leaf doorways

If a doorway has more than one independently operated leaf, at least one active leaf shall

(a) comply with Clauses 5.2.1 and 5.2.2; and

(b) where only one door is accessible in a bank of doors, be identified by the International symbol of access (see Figure 11).

Commentary:

(1) In double doors, the use of a centre post should be avoided.

(2) All doors should be accessible.

5.2.4 Revolving doors

Where a revolving door is used, an adjacent door shall be provided that complies with Clauses 5.2.1 and 5.2.2.

5.2.5 Two doors in series

The distance between two swinging doors in series shall be at least 1200 mm plus the width of any door swinging into the space (see Figure 19).

Commentary:

The distance between two swinging doors in series should be increased to at least 1500 mm to accommodate larger power wheelchairs or scooters.

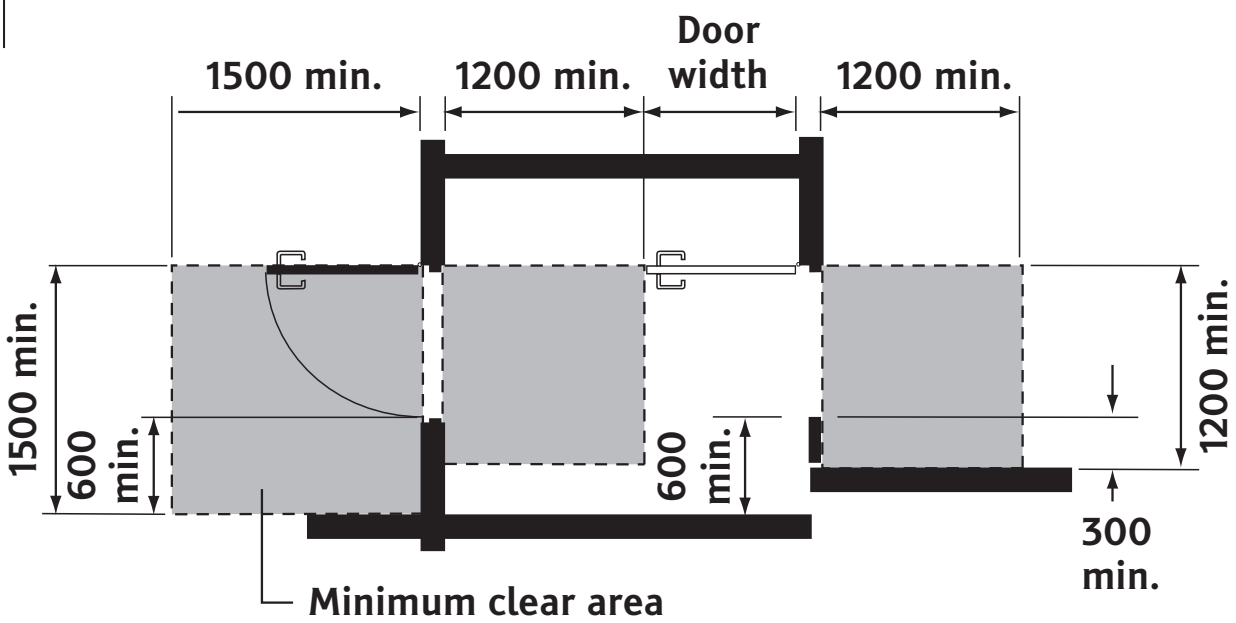

(a)

Figure 19
Manoeuvring area at doors in series
(See Clause 5.2.5.)

(Continued)

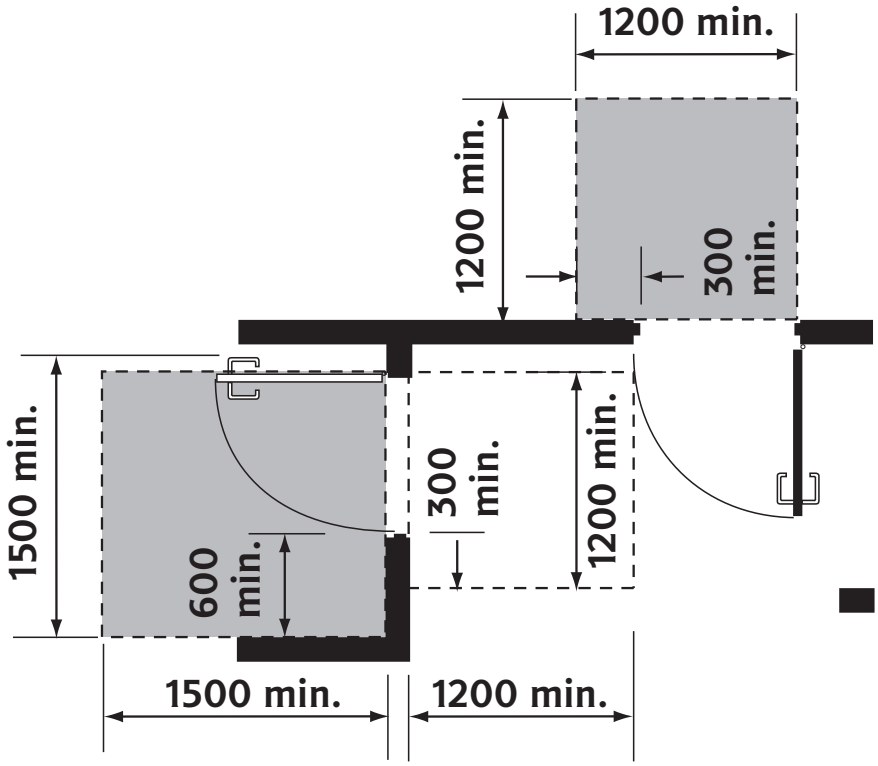

(b)

Figure 19 (Concluded)

5.2.6 Thresholds

Thresholds shall

(a) be not more than 13 mm high; and

(b) where over 6 mm high, be bevelled at a slope not steeper than a ratio of 1:2 (50%) (see Figure 4).

Commentary:

Level thresholds are preferred.

5.2.7 Door hardware

Δ 5.2.7.1 Operating devices

Operating devices such as handles, pulls, latches, or locks shall

(a) comply with Clause 4.2;
(b) be mounted between 900 and 1100 mm from the floor; and
(c) on a sliding door, be exposed and usable with a closed fist from both sides.

Commentary:

(1) Lever handles or other types of handles that can be operated with a closed fist should be used on latched doors. "U"-shaped door levers (see Figure 20) reduce the risk of catching on clothing or injury from the exposed lever end. Knob handles and thumb-latch handles are not appropriate because they require tight grasping and fine finger control. Push-pull mechanisms are preferred.
(2) Panic hardware that does not interfere with passage through a doorway is available and should be used.
(3) Kickplates at least 250 mm high on the push side of doors should be considered in high-traffic areas to protect the door from damage.
(4) Large D-shaped handles should be used for sliding doors.

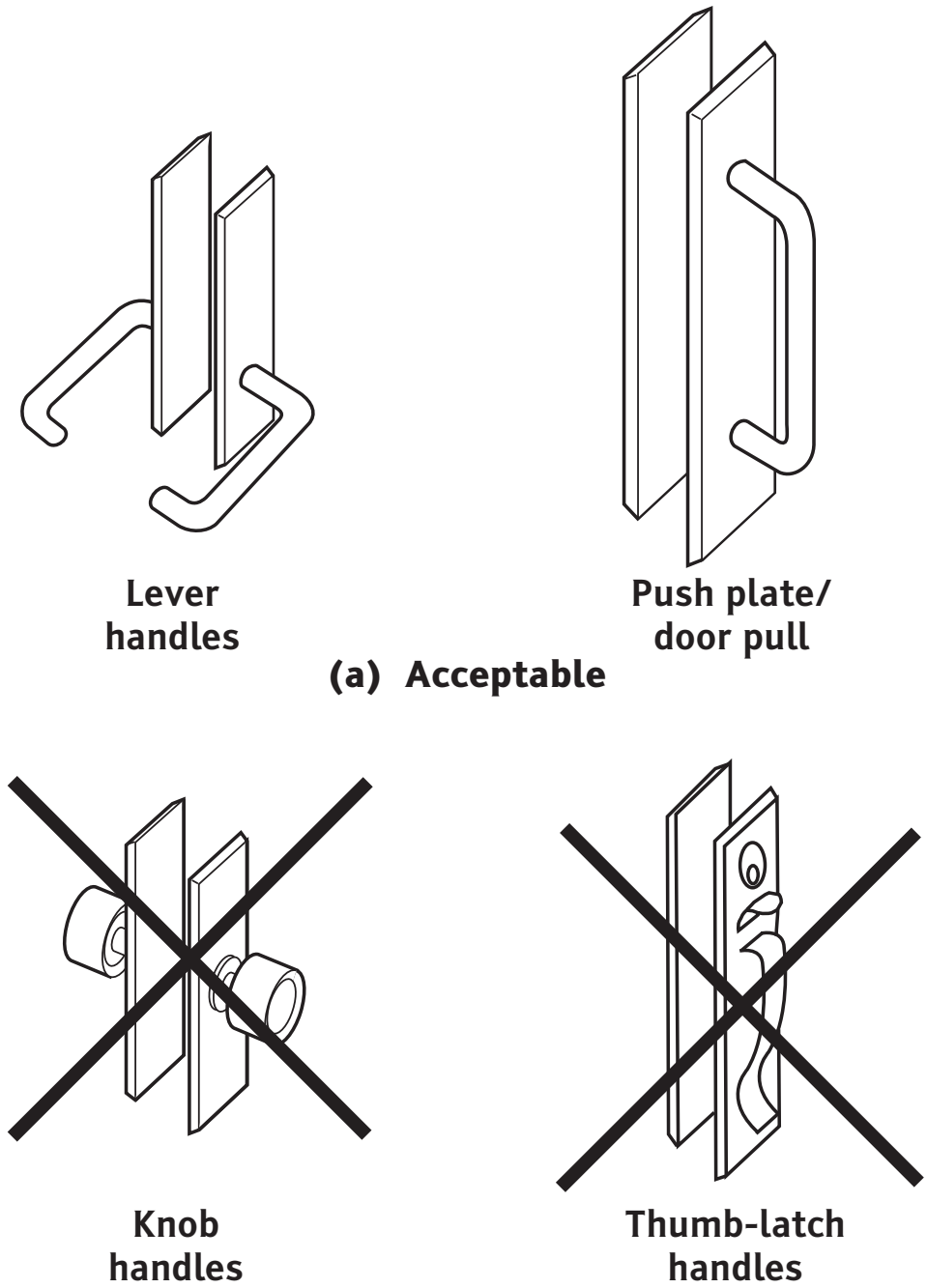

Figure 20
Handles
(See Clause 5.2.7.1.)

5.2.7.2 Door closers

The sweep period of door closers shall be adjusted so that the door will take 3 s or more to move from an open position of 90° to a semi-closed position of approximately 12°.

5.2.8 Door-opening force

A force for pushing or pulling a door shall not be more than

(a) 38 N for exterior swinging doors;
(b) 22 N for interior swinging doors; and
(c) 22 N for sliding or folding doors.

Commentary:

Where a force of 38 N or more is required to provide for a self-closing door, a power-assisted door opener should be considered.

5.2.9 Power-assisted doors

Δ 5.2.9.1 General

A power-assisted swinging door shall

(a) take 3 s or more to move from a closed to a fully open position, except when a safety sensor is installed;
(b) remain fully open for a minimum of 5 s;
(c) require a force of not more than 66 N to stop door movement, except when the door is equipped with a safety sensor that automatically stops the door if there is an obstruction in the path of movement; and
(d) where it opens into a route of travel, have cane-detectable guardrails or other barriers at right angles to the wall containing the door (see Figure 21).

Commentary:

(1) Power-assisted doors have two different types of operation: one that is automatically activated by a motion detector or a floor-pad sensor and one that is manually activated by pushing a control.
(2) Doors that open automatically should be the preferred option, since they do not require manual activation.

(3) Sliding automatic doors are generally the most convenient to use, since they provide for a smooth traffic flow and do not require guardrails for door-swing protection.

(4) Manual power-assist controls might be difficult to activate for persons with limited strength, reach, vision, or manual dexterity. The length of time the door should remain open is affected by the distance between the manual power-assist control and the door itself.

(5) At least one power-assisted door should be provided at the main entrance(s) to a building.

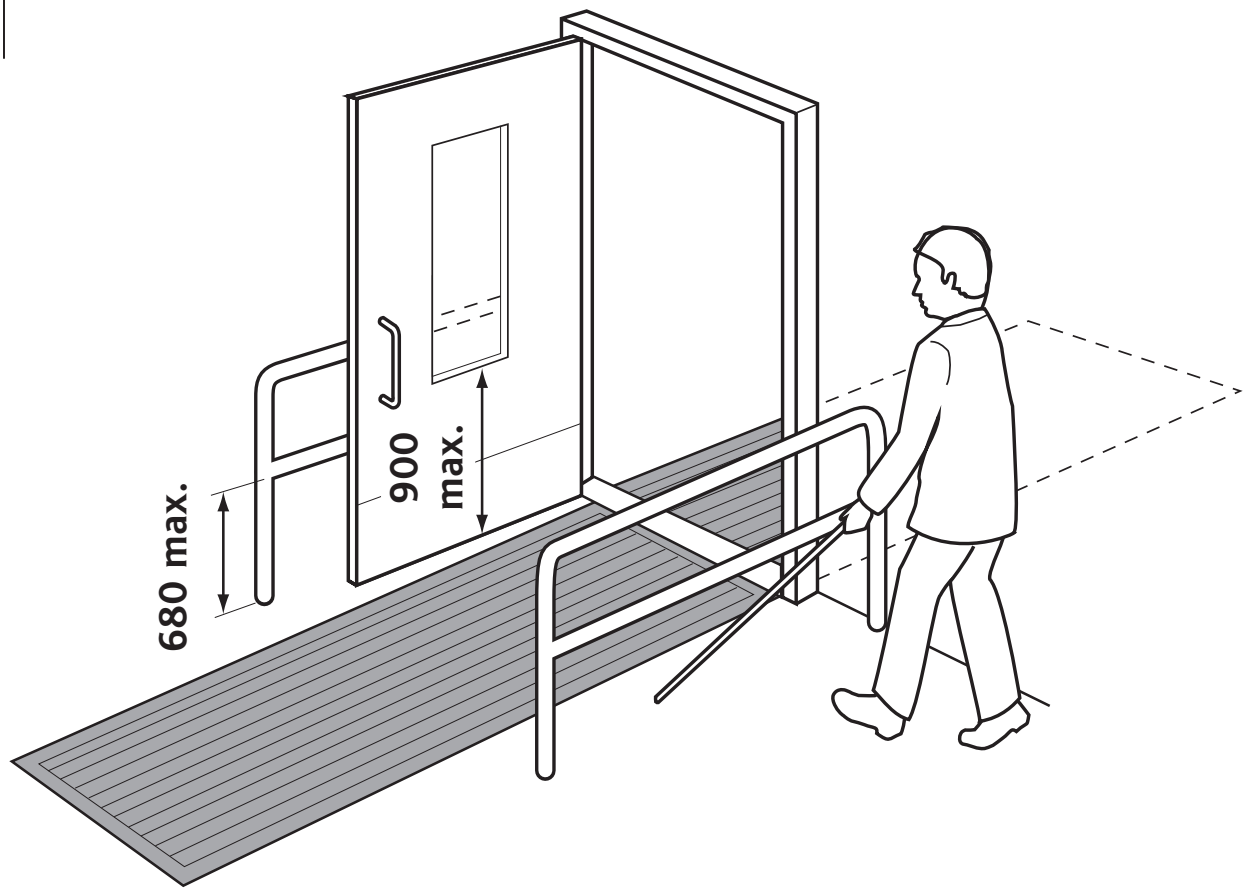

Figure 21
Guards at out-swinging power-assisted door
(See Clauses 5.2.9.1 and 5.2.10.)

Δ 5.2.9.2 Location of controls

For doors that are not automatically activated, controls to open power-assisted doors shall

(a) be located along the route of travel;
(b) be clearly visible before reaching the door; and
(c) be adjacent to a clear floor area, 1350 mm by 800 mm, that is clear of the door swing but is no further than 1500 mm from it.

Δ 5.2.9.3 Controls

Controls for power-assisted doors shall be activation pads that

(a) comply with Clause 4.2;
(b) have a shape either
    (i) rectangular of at least 25 × 75 mm; or
    (ii) circular with a diameter of at least 100 mm;
(c) are operable by touching or approaching in close proximity any part of the surface with a fist, arm, or foot;
(d) are operable from a height between 150 mm and 300 mm as well as between 900 mm and 1100 mm above the floor; and
(e) are identified with the International symbol of access.

Commentary:

Instead of installing one or two activation pads in any one location, a vertical activation bar that extends from 175 mm to 900 mm above the finished floor should be installed. This bar provides enhanced flexibility for accessing the power control, since pushing any part of the bar, in any manner, allows the user to activate the door control.

5.2.9.4 Security access systems

Where both activation pads and security access systems are used for the same door, they shall

(a) be located together with a horizontal separation of not more than 300 mm;
(b) be located so that the security access device is the first device encountered when approaching the door; and
(c) have the security access system comply with Clause 5.7.4.

Commentary:

(1) Security access systems capable of automatically opening a door through a single action are preferred.

(2) In a power-assisted operation, the security profile would arm the activation pad for use.

Δ 5.2.10 Glazed panels

A glazed panel in a door shall

(a) be transparent;

(b) have its lower edge not higher than 900 mm from the floor (see Figure 21); or

(c) where the door or sidelight is fully glazed, be marked with a continuous opaque strip that

  (i) is visually contrasting to the background of the door;

  (ii) is at least 50 mm high; and

  (iii) extends the full width of the door and/or sidelight at a height between 1350 mm and 1500 mm from the floor.

Commentary:

(1) Doors and door frames that colour-contrast with their background and each other enable people to locate the door more easily.

(2) Doors made entirely of glass and mounted in glass walls are difficult to detect and require markings to aid in defining and signalling the presence of doors and glass walls to users.

5.2.11 Doors in primary horizontal circulation routes

Where fire regulations permit, a door connecting two primary horizontal circulation routes shall have a transparent glazed panel that complies with Clause 5.2.10.

Commentary:

The area and type of glazing in the door should not compromise the fire resistance of the door assembly.

5.2.12 Turnstile gates

Where a turnstile is used, it shall

(a) have an adjacent gate with a clear width of at least 810 mm (see Figure 22); and

(b) comply with Clause 5.7.4 when a security system is incorporated.

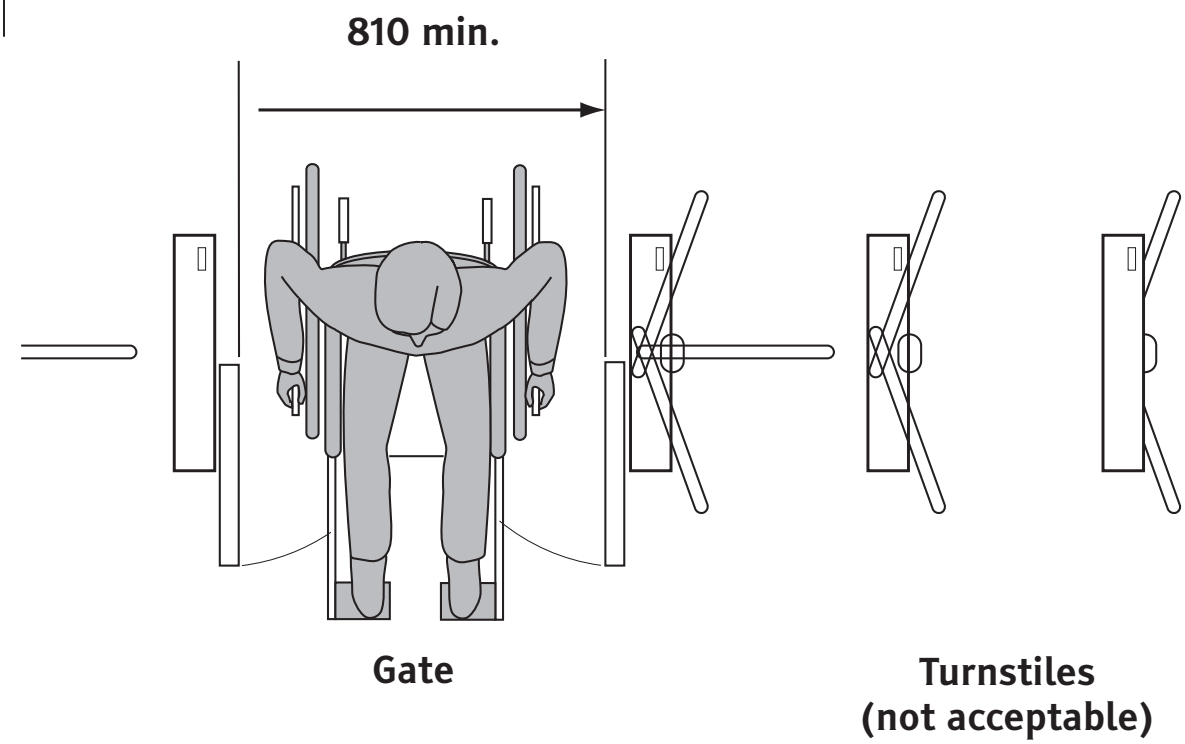

Figure 22
Access gate beside turnstiles
(See Clause 5.2.12.)

5.3 Handrails

5.3.1 Handrail grip

Handrails shall

(a) resist a force of at least 1.3 kN applied in any direction;

(b) have a graspable cross-section that is either

  (i) circular with an outside diameter of 30 to 40 mm (see Figure 23); or

  (ii) elliptical with an outside perimeter between 100 and 125 mm, with the largest cross-sectional dimension not more than 45 mm (see Figure 23);

(c) be free of any sharp or abrasive elements;

(d) have a continuous gripping surface, without interruption by newel posts or other construction elements or obstructions that interrupt a hand hold;

(e) have a clear space between the handrail and the wall, and underneath the handrail, as follows:

  (i) between 35 and 45 mm wide for a smooth wall surface; and

  (ii) between 45 and 60 mm wide for a rough wall surface; and

(f) be colour-contrasted with the surrounding wall surface.

Commentary:

(1) Handrails are important features. They should be graspable and provide a firm and comfortable grip for the hand to slide along the rail without obstruction.

(2) A circular section with a diameter not more than 40 mm is the preferred shape so that the thumb and fingers can lock around the handrail. Wide or deep handrails that allow only a pinched grip should not be used unless a proper hand-size grasping area is provided (see Figure 24).

(3) The maximum clearance allowed between the rail and wall is to provide for adequate gripping room, but also prevents injuries to arms slipping through the opening.

(4) The handrail and clearance should not protrude more than 100 mm from the wall.

5.3.2 Recessed handrail

A recess containing a handrail shall extend at least 450 mm above the top of the rail (see Figure 25).

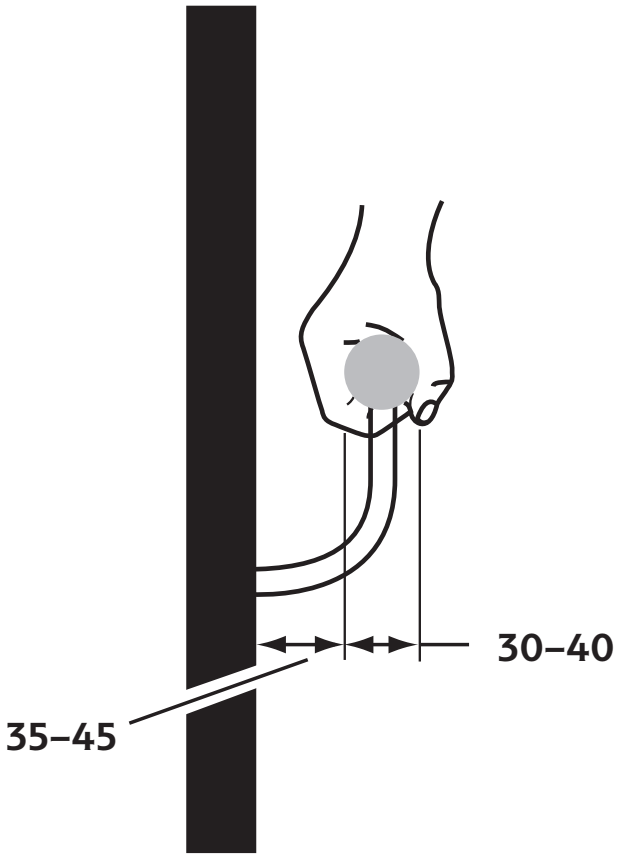

Figure 23
Handrails
(See Clause 5.3.1.)

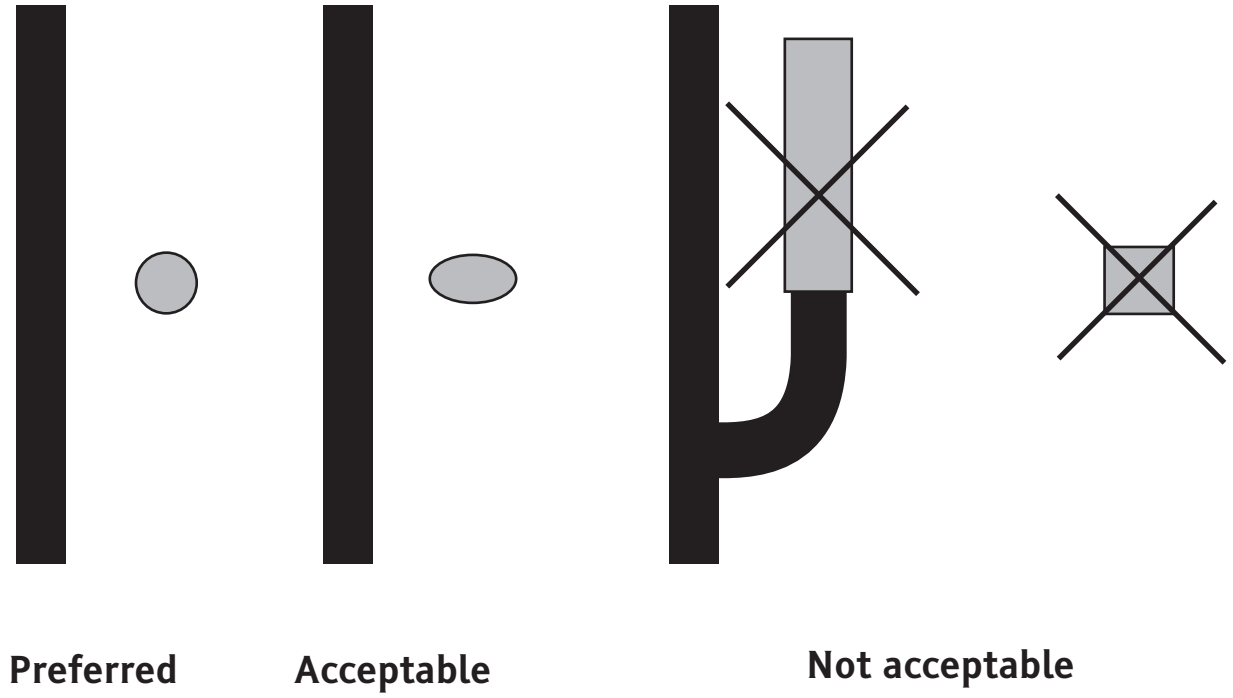

Figure 24
Handrail shapes
(See Clause 5.3.1.)

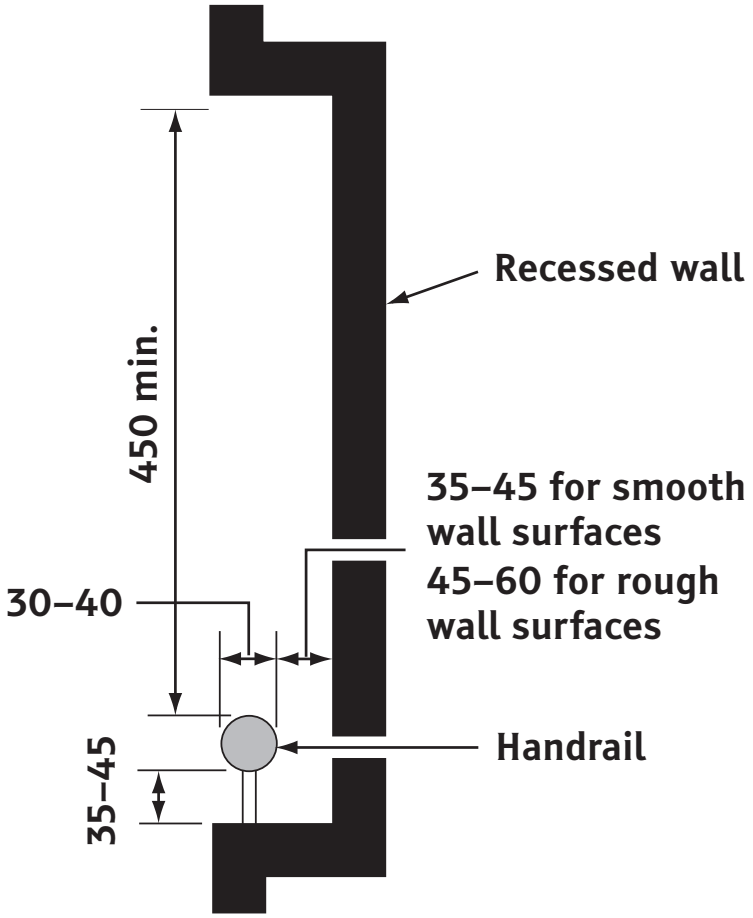

Figure 25
Handrail in a recess
(See Clause 5.3.2.)

5.4 Stairs

Δ 5.4.1 Treads and risers

A flight of stairs shall

(a) have uniform riser heights and tread depths;
(b) have risers not more than 180 mm high;
(c) have treads that are slip resistant;
(d) have treads not less than 280 mm deep, measured from riser to riser;
(e) have no open risers (see Figure 26(c));

(f) be illuminated to at least 50 lx at the tread; and
(g) have a horizontal strip at the edge of the tread that
  (i) is 50 ± 10 mm deep;
  (ii) is colour-contrasted with the tread and riser; and
  (iii) extends the full width of the tread.

Commentary:

(1) Stairs with open risers are hazardous to persons who need a solid riser to guide the foot up the riser to the next step or who place canes or crutches against the riser of the next step.
(2) Strongly patterned carpets should not be used on stairs since they cause perceptual problems and obscure the definition of the tread edges.

Δ 5.4.2 Nosing

The nosing shall
(a) project not more than 38 mm;
(b) have no abrupt undersides [see Figure 26(d)];
(c) have a radius of curvature at the leading edge of the tread not more than 13 mm;
(d) where projecting, be sloped to the riser at an angle greater than 60° to the horizontal [see Figure 26(a)]; and
(e) have a horizontal strip 50 ± 10 mm deep that
  (i) is colour-contrasted with the tread and riser; and
  (ii) extends the full width of the tread.

Commentary:

(1) The nosing is that part of a step that overhangs the step below. A contrasting colour at the nosing ensures that the tread edge is clearly visible.
(2) Where projecting nosings are used, they must not have sharp or abrupt angles that prevent the foot from sliding up the riser.

5.4.3 Tactile attention indicator surfaces at stairs

5.4.3.1 General

A tactile attention indicator surface shall

(a) comply with Clauses 4.3.5.2 and 4.3.5.3;
(b) be located at the top of stairs;
(c) extend the full width of the stairs; and
(d) have a length between 600 and 650 mm, commencing one tread depth from the edge of the stair [see Figures 5(b) and 26(b)].

Commentary:

(1) A tactile attention indicator surface that is detectable underfoot or by a long white cane is necessary to caution people that they are approaching the onset of descending stairs.
(2) See Clause 3 for the definition of a tactile walking surface.

5.4.3.2 Location

A tactile attention indicator surface shall be provided

(a) at stairs that are not enclosed;
(b) at each landing incorporating an entrance into a stair system;
(c) where the regular stairway pattern is broken; and
(d) where the run of a landing with no continuous handrail is greater than 2100 mm.

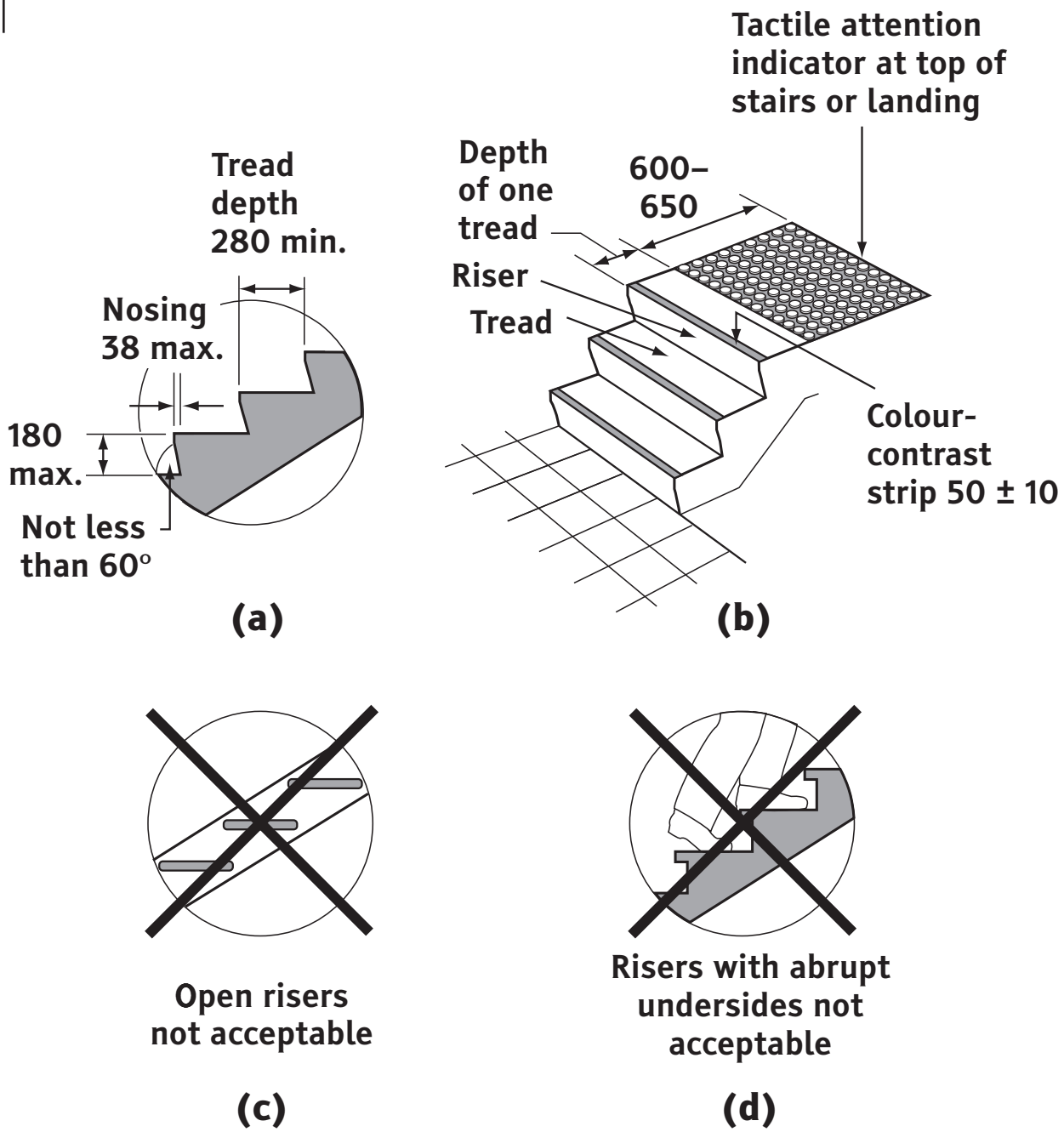

Figure 26
Stair detail
(See Clauses 5.4.1 to 5.4.3.)

5.4.4 Stair handrails

Handrails shall be provided for stairs and shall

(a) comply with Clause 5.3;
(b) be installed on both sides of the stairs (see Figure 27);
(c) be of uniform height, from 860 to 920 mm, measured vertically from the leading edge of the tread;
(d) be continuous around landings less than 2100 mm in length, except where the landing
  (i) is intersected by an alternative path of travel; or
  (ii) has an entry door leading onto it;
(e) be continuous where located on the inside edge of the stairs (see Figure 28);
(f) at the top of the stairs, extend at least 300 mm parallel to the floor surface (see Figure 30);
(g) at the bottom of the stairs, continue to slope for a distance equal to the depth of one tread and then extend at least 300 mm parallel to the floor surface (see Figure 29); and
(h) have the rail extension return to the post, floor, or wall (see Figures 27, 29, and 30).

Commentary:

(1) Many people rely upon handrails to maintain balance, prevent falls, and serve as a visual and tactile wayfinding guide.
(2) Handrail extensions at the top and bottom of stairs provide support and orientation for persons using stairs, and a continuous handrail assists them in negotiating changes in direction (see Figures 29 and 30).
(3) The handrail extensions should be turned down or sideways so they do not constitute a hazard by protruding into the path of travel.

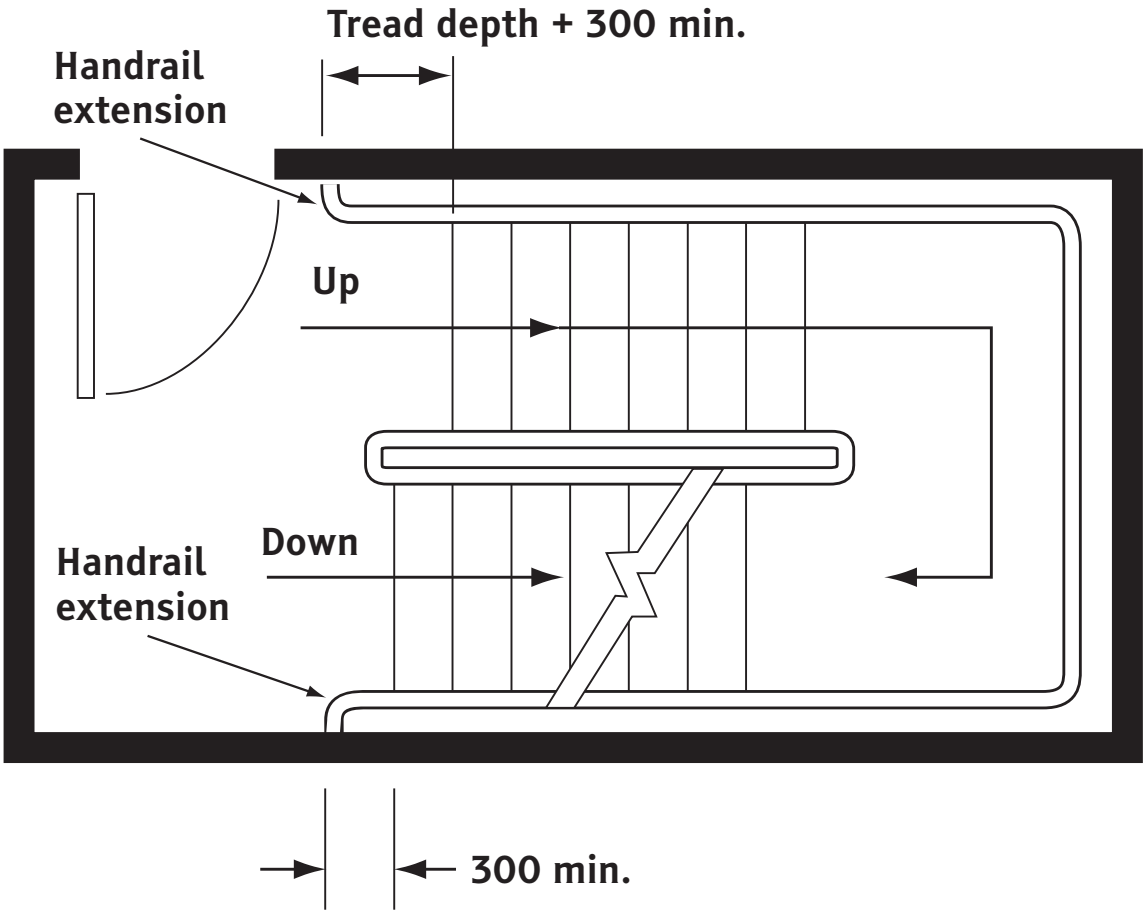

Figure 27
Stair handrails
(See Clause 5.4.4.)

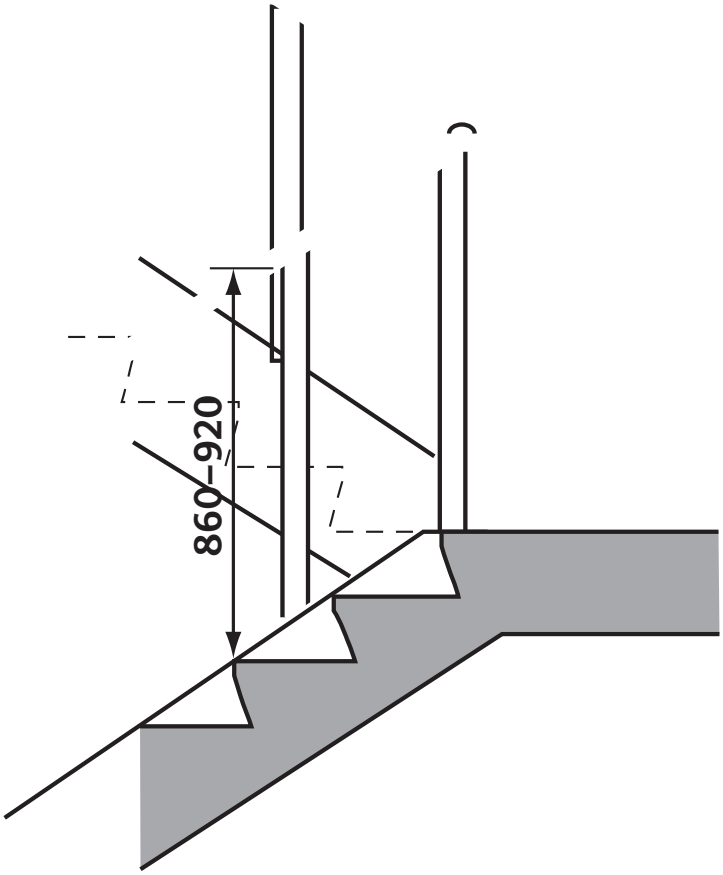

Figure 28
Continuous inside handrail at stairs
(See Clause 5.4.4.)

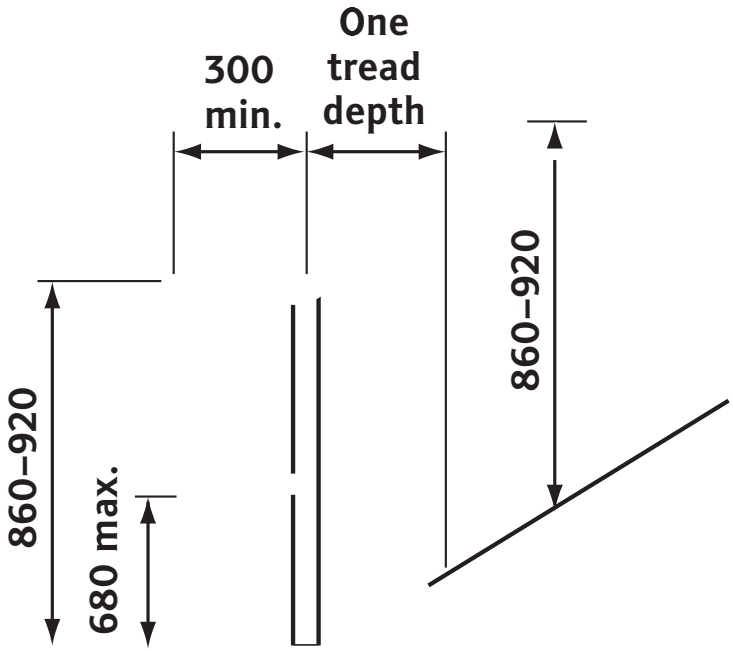

Figure 29
Handrail extension at bottom of stairs
(See Clause 5.4.4.)

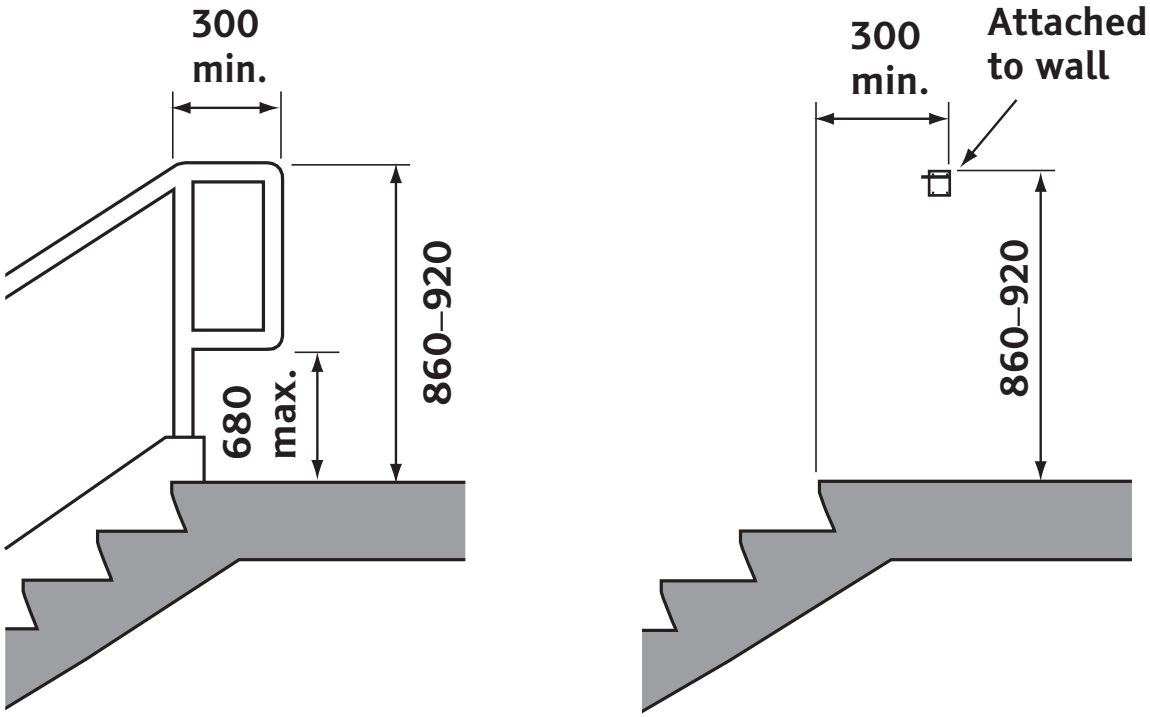

Figure 30
Handrail extension at top of stairs
(See Clause 5.4.4.)

5.5 Ramps

5.5.1 Running slope and length

A ramp shall have

(a) a running slope with the ratio between 1:12 (8.33%) and 1:20 (5%); and

(b) a distance between level landings not longer than 9000 mm.

Commentary:

(1) A ramp is a sloping walkway leading from one level to another. The running slope of the ramp is the ratio of the change in level (vertical rise) to its horizontal length (run) (see Figure 31). The more gradual the slope of the ramp (i.e., the less steep it is) the more easily persons

can use it without assistance. Therefore, slopes with the ratio between 1:20 (5%) and 1:15 (6.7%) are preferred.

(2) Routes that have a more gradual slope [less steep than 1:20 (5%)] do not have to follow the specifications required for ramps.

(3) Many people find using steps easier and safer than a ramp; therefore, both stairs and a ramp should be provided in any one location.

(4) Ramps that surmount a major change in level (vertical rise) have to be very long and require multiple ramp and landing combinations. In such circumstances, other design solutions should be considered.

(5) Curved ramps should not be used as a design solution.

5.5.2 Cross slope

The cross slope of the ramp surface shall not be steeper than the ratio of 1:50 (2%).

5.5.3 Width

The clear width on a ramp shall be at least 920 mm.

Δ 5.5.4 Landings

A level landing shall

(a) be provided at the top and bottom of each ramp;

(b) be provided at all changes of ramp direction;

(c) be at least as wide as the widest ramp leading to it;

(d) have a length not less than 1500 mm;

(e) at doorways serving an accessible route, have an area of at least 1500 × 1500 mm;

(f) include passing spaces with an area of at least 1500 mm x 1500 mm

  (i) at the connection points when more than two ramp segments are used to surmount a level change; and

  (ii) at the turning point when a turn separates two ramp segments; and

(g) where it meets a slope change, have a 50 ± 10 mm wide colour-contrasted and slip-resistant strip equal to the width of the ramp.

Commentary:

(1) At intermediate landings that have a 90° turn, an increased manoeuvring area may be achieved by cutting the inner corner at a 45° angle to eliminate the sharp angle [see Figure 32(a)].

(2) Doorways at landings require sufficient manoeuvring area at the latch edge of the door [see Figure 32(b)].

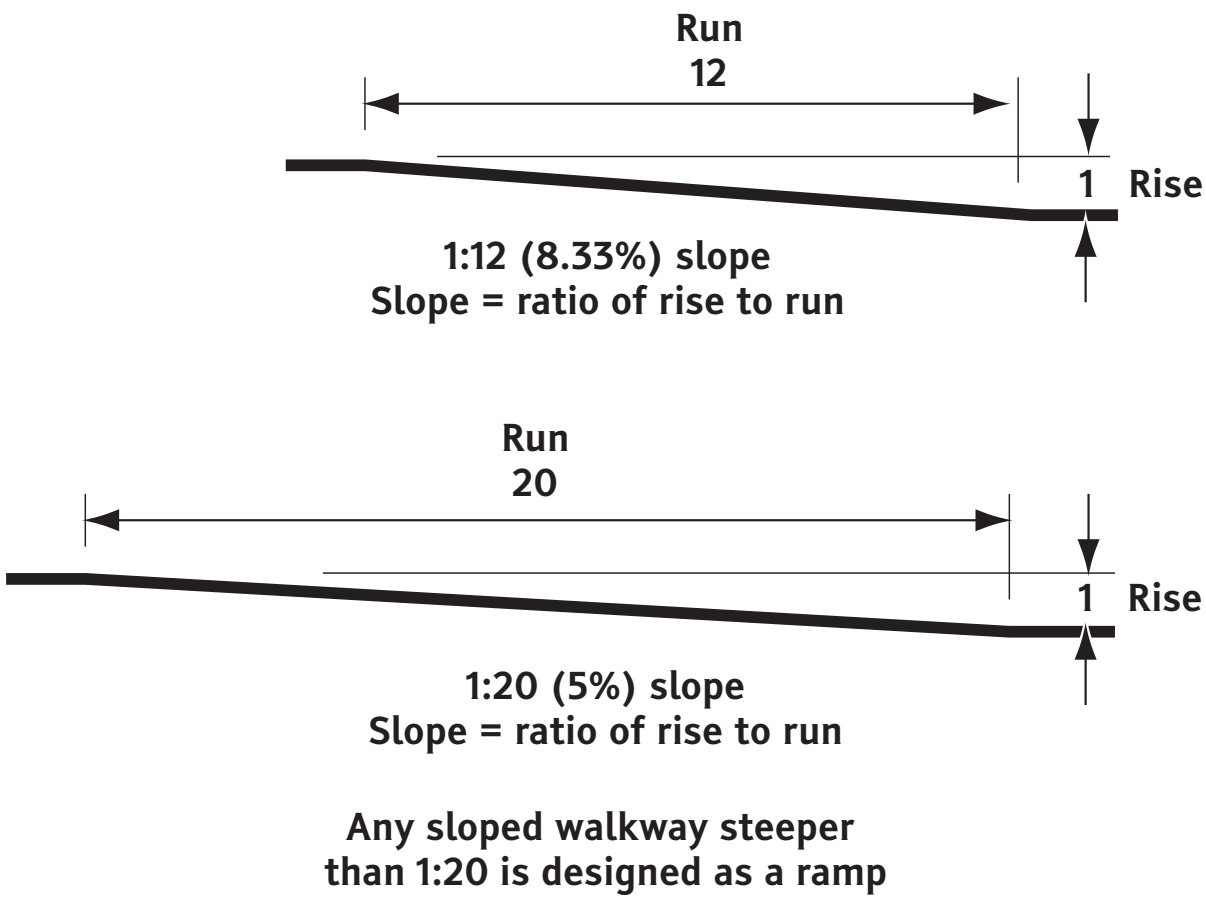

Figure 31
Ramp slope
(See Clauses 5.5.1 and 8.2.7.)

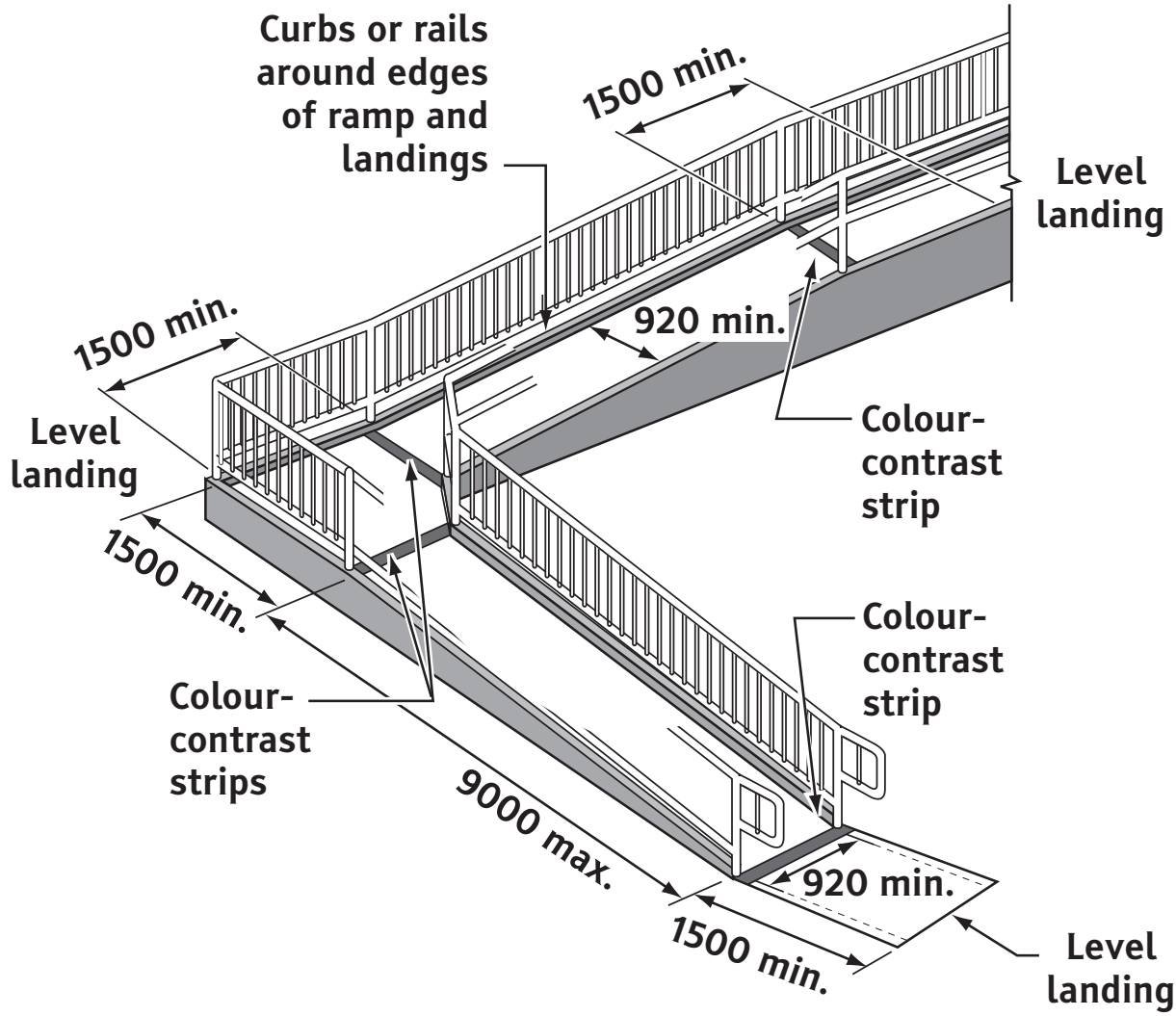

Note: Handrails have been partially omitted for clarity.

Figure 32(a)
Ramps and landings
(See Clauses 5.5.4 and 8.2.7.)

(Continued)

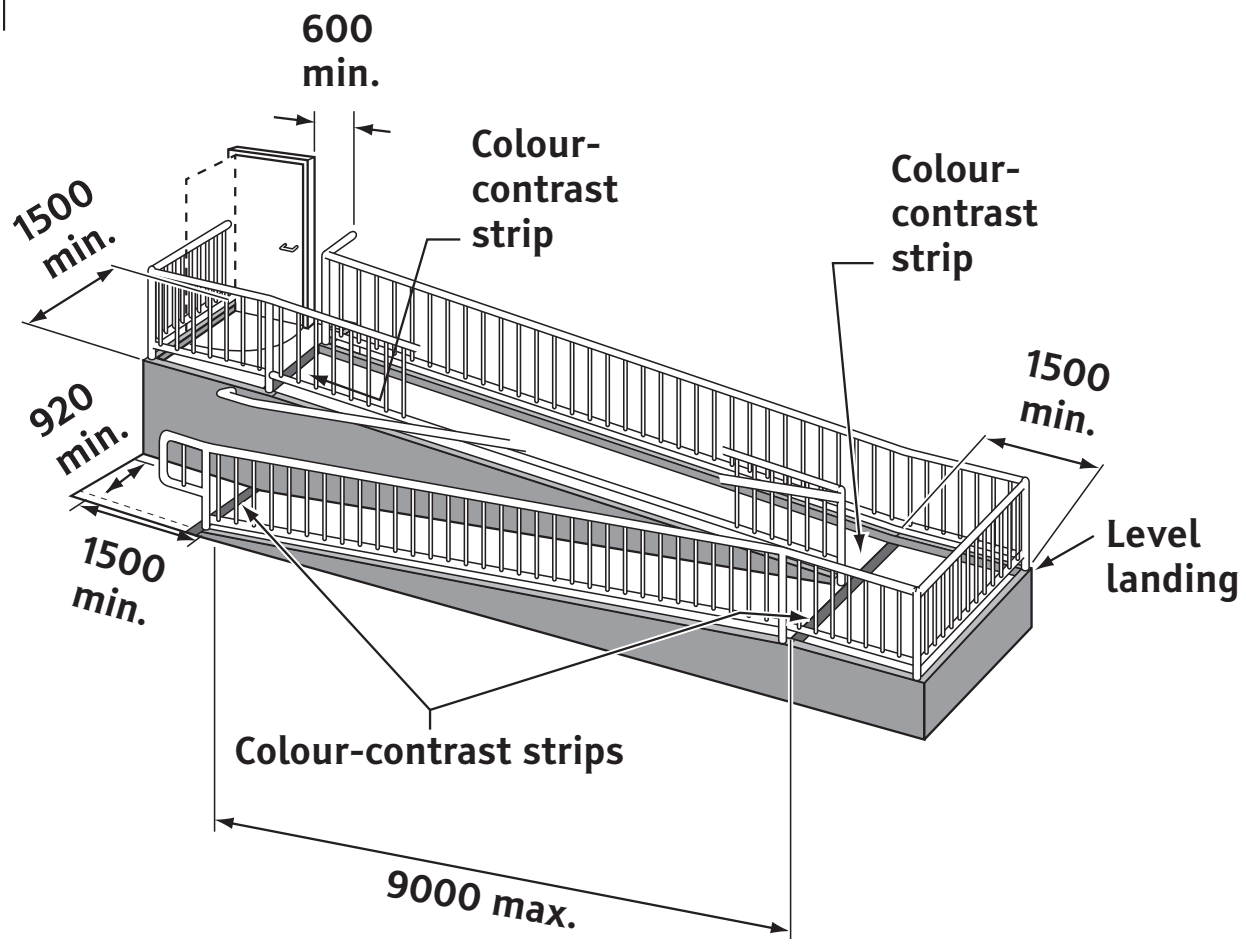

Note: Handrails have been partially omitted for clarity.

Figure 32(b) (Concluded)
(See Clauses 5.5.4 and 8.2.7.)

5.5.5 Surfaces

A ramp and landing surface shall comply with Clause 4.3.1.

Commentary:

See Annex C for additional guidance on the potential for slip of floor and tread finishes.

Δ 5.5.6 Edge protection

On ramps and landings that are not at grade or adjacent to a wall, protection shall be provided on all edges in the form of either

(a) a curb with a minimum height of 100 mm [see Figure 33(a)]; or

(b) a raised barrier or rail with its lower edge not more than 100 mm from the ramp or landing surface [see Figure 33(b) and (c)].

Commentary:

(1) Ramp edge protection is required to prevent wheels or walking aids from moving off the ramp surface.

(2) Both handrails and edge protection are required on ramps.

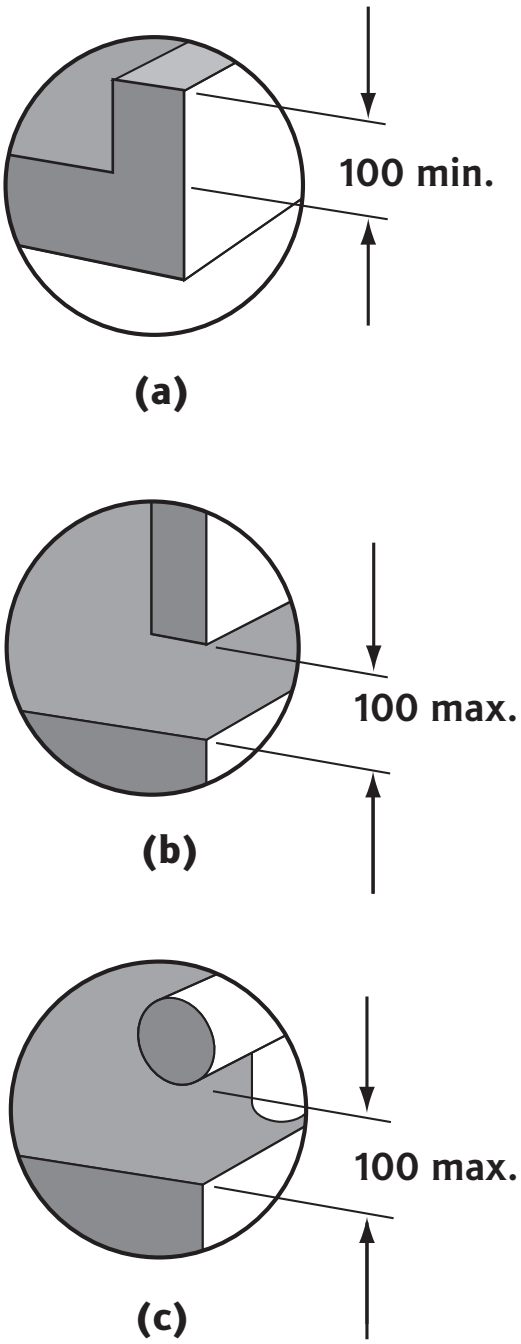

Δ

Figure 33
Ramp edge protection
(See Clauses 5.5.6 and 8.2.7.)

Δ 5.5.7 Illumination

Illumination at the surface level of a ramp and its landings shall be at least 50 lx.

Δ 5.5.8 Ramp handrails

Ramps shall have handrails on both sides that

(a) comply with Clause 5.3;
(b) are continuous on the ramp and around landings;
(c) are colour-contrasted with their surroundings;
(d) have at least one set of handrails with a clear width between 920 mm and 1000 mm between the rails;
(e) have a height between 860 mm and 920 mm, measured from the ramp surface to the top of the rail; and
(f) have horizontal extensions beyond the top and bottom of the ramp
    (i) at least 300 mm long; and
    (ii) that are returned to the post, floor, or wall (see Figure 34).

Commentary:

(1) Handrail extensions at the top and bottom of ramps provide support and orientation for persons before they start using the ramp. The handrail extensions should be turned down or sideways so they do not constitute a hazard by protruding into the path of travel (see Figure 34).
(2) The clear width between handrails is limited so that people who use wheelchairs can use both handrails to pull themselves up the ramp.
(3) Where guardrails are installed to comply with authorities having jurisdiction, and where the top guardrail is higher than 920 mm, handrails at the required height should also be provided.

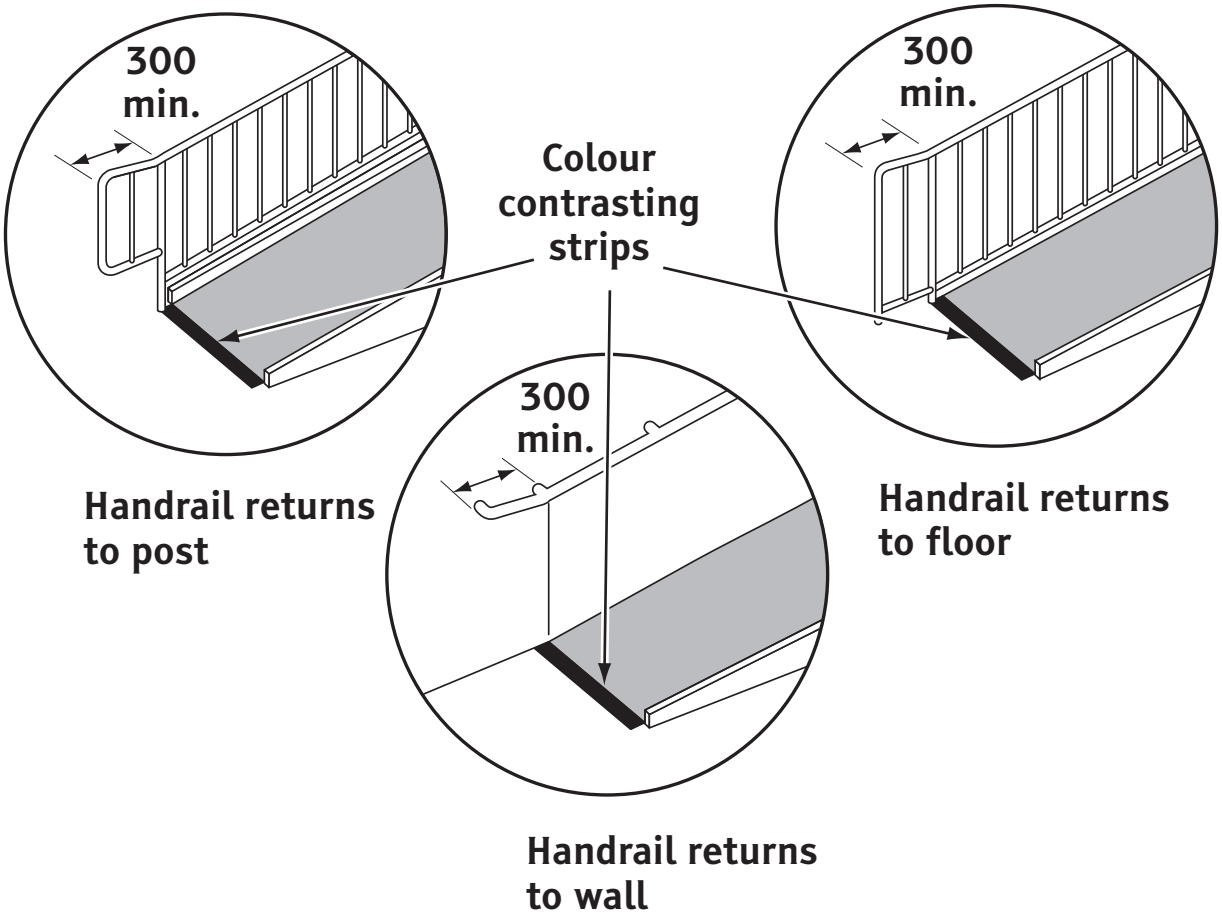

Note: Near handrail omitted for clarity.

Figure 34
Ramp handrail extensions
(See Clause 5.5.8.)

5.6 Elevating devices

5.6.1 Elevators

An accessible elevator shall comply with Appendix E of ASME A17.1/CSA B44.

Commentary:

(1) Annex E of this Standard reproduces the requirements for accessible elevators.

(2) Where the internal area of an elevator has limited manoeuvring space for a wheelchair user to turn around, a mirror should be provided at the top of the rear wall to allow the user to see the floor indicator and the door opening.

5.6.2 Platform lifts

Elevating devices such as platform lifts shall comply with CSA B355 and the requirements of authorities having jurisdiction.

Commentary:

Clause 3 provides the definitions of various platform lifts.

5.6.3 Escalators

5.6.3.1 Route of travel

Escalators shall not be considered as part of an accessible route of travel.

5.6.3.2 Illumination

Escalators shall be illuminated to at least 100 lx at the tread surface level.

5.6.4 Moving walkways

5.6.4.1 General

Moving walkways shall

(a) comply with Clause 6.2 of ASME A17.1/CSA B44; and

(b) have an accessible route adjacent to it.

Commentary:

Where moving walkways are provided, they should be available to users of manual mobility aids.

5.6.4.2 Width

The width of the exposed treadway of moving walkways shall be at least 920 mm.

5.6.4.3 Angle of inclination

Where walkways are inclined, the angle of inclination of accessible moving walkways shall not be steeper than in a ratio of 1:20 (5%).

Commentary:

Moving walkways with an incline steeper than 1:20 (5%) or that have an abrupt slope increase should be not used. Steep inclines can be hazardous for all users.

5.6.4.4 Illumination

Moving walkways shall be illuminated to at least 100 lx at the treadway surface.

5.6.4.5 Audible indication

An audible indication shall

(a) be provided to warn riders that the moving walkway is ending; and

(b) have a signal, measured at the annunciator, at least 10 dBA above the ambient noise level.

Commentary:

(1) An audible indication will assist users to determine when the end of the moving walkway is approaching.

(2) The audible indication may be either a distinct electronic tone or a verbal announcement.

5.7 Emergency and security

5.7.1 Visual alarms

Visual alarms shall consist of lights that

(a) flash in conjunction with the audible emergency alarm;

(b) have a flash rate within the frequency range of 1 to 3 Hz;

(c) are synchronized to flash in unison;

(d) are placed so that a signal from at least one alarm is visible throughout any enclosed space; and
(e) are significantly brighter than the ambient light.

Commentary:

(1) A flash rate in the frequency range of 1 to 3 Hz (pulses per second) has been found to minimize the risk of triggering an epileptic seizure.
(2) Visual alarms with overlapping signals have to be synchronized so that the observed combined flash pattern does not exceed the allowable frequency range. Where this is not technically feasible, equivalent protection should be provided.

5.7.2 Areas of refuge

5.7.2.1 General

An area of refuge shall
(a) be of a size that provides for two spaces of at least 850 × 1200 mm each;
(b) have a door that complies with Clauses 5.2.1, 5.2.6, 5.2.7, and 5.2.8;
(c) have a hands-free communication system that is
  (i) not higher than 1200 mm from the floor; and
  (ii) connected to an emergency response system;
(d) be separated from the building floor area by a fire separation with a fire-resistance rating at least equal to that required for an exit;
(e) be smoke-protected in buildings of more than three stories; and
(f) be served directly by an exit or by a firefighters' elevator.

Commentary:

(1) An area of refuge is a safe holding space for evacuation in a fire situation and provides a known place for firefighters to help persons unable to use the stairs.

(2) An area of refuge could be an enlarged landing in an exit stair (see Figure 35), but people waiting in such a space should not obstruct evacuation, and the door swing should not encroach on the waiting space.

(3) There should be a power-assisted door opener to enter an area of refuge.

(4) An exit through a fire separation wall may be considered as equivalent to an area of refuge.

(5) A firefighters' elevator is an elevator system designed for use by firefighters (or others under their supervision) in evacuation situations.

(6) The term "smoke-protected" describes spaces that will contain not more than 1%, by volume, of contaminated air from the fire floor during a 2 h period after the onset of a fire, assuming an outdoor air temperature equal to the January design temperature on a 2-1/2% basis.

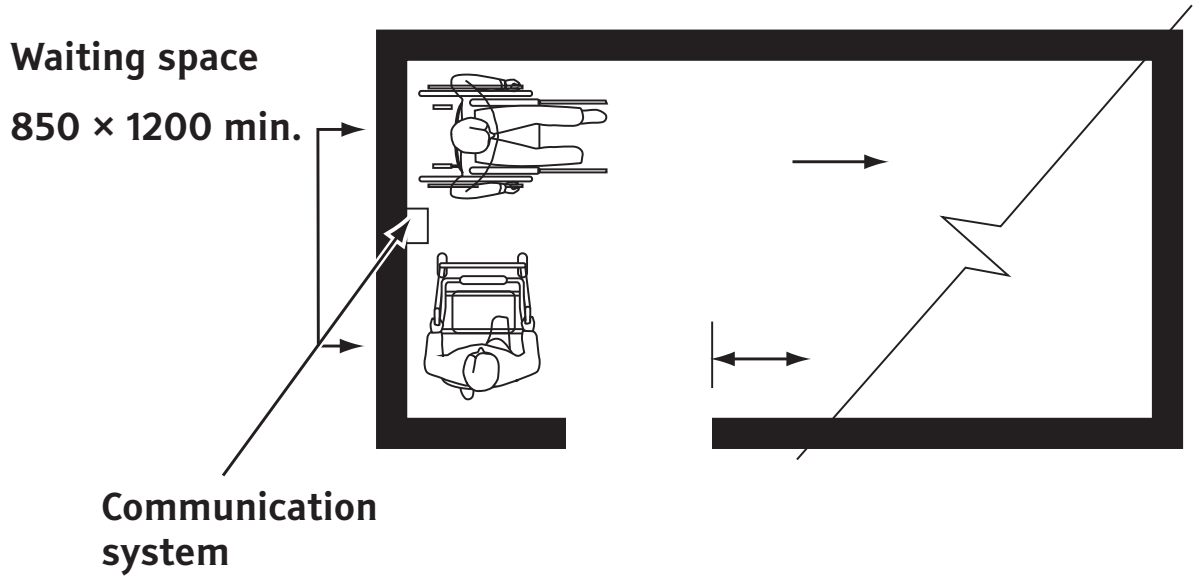

Figure 35
Example of area of refuge
(See Clause 5.7.2.1.)

5.7.2.2 Identification

An area of refuge shall

(a) be identified by signage that conforms to Clause 4.5;
(b) have the evacuation route to it identified by signage
  (i) that conforms to Clause 4.5; and
  (ii) incorporates the symbols shown in Figure 36(a);
(c) where a horizontal separation is used as an area of refuge, have the evacuation route to it identified by signage
  (i) that conforms to Clause 4.5; and
  (ii) incorporates the symbols shown in Figure 36(b);
(d) be identified on all publicly displayed evacuation plans; and
(e) be designated in evacuation plan and procedure documents.

Commentary:

Since areas of refuge provide only temporary safety, it is important for building management to develop fire safety operating procedures that complement the building design features.

(a)
Directional evacuation sign to an area of refuge

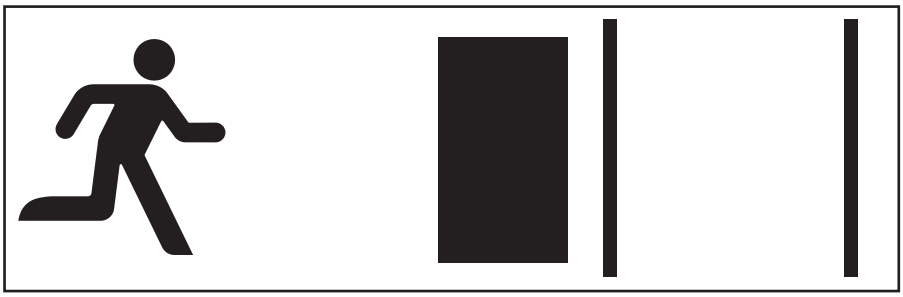

(b)
Directional evacuation sign to a firefighters' elevator

Figure 36
Directional evacuation signs
(See Clause 5.7.2.2.)

5.7.3 Evacuation plans

An emergency evacuation plan shall

(a) be posted not higher than 1200 mm from the floor;
(b) be provided in at least a 14 point font;
(c) be available in alternative formats; and
(d) have signage that complies with Clause 4.5.

5.7.4 Access to secure areas

5.7.4.1 Security access systems

A security access system shall

(a) be located along the accessible route;
(b) comply with Clause 4.2 ; and
(c) provide equitable alternative means to allow persons with disabilities through the security system.

Commentary:

(1) Security access systems should be usable by everyone. Proximity or contactless scanners may facilitate this.
(2) Biometric systems (e.g., retinal or palm scanners) cannot accommodate all users.

5.7.4.2 Card access

5.7.4.2.1 Card reader access

Where a card is required to be inserted into a reader, it shall

(a) have the entry slot
  (i) located at a height between 800 and 900 mm from the floor;
  (ii) with its edges bevelled; and
  (iii) colour-contrasted with the surrounding surface;
(b) include tactile graphic symbols on the surrounding surface that
  (i) represent the card; and
  (ii) identify the orientation of the card insertion; and
(c) have both audible (beep) and visual (light) signals to indicate that access has been granted.

5.7.4.2.2 Proximity card access

Where a proximity card reader is used, it shall

(a) be located at a height between 800 and 1200 mm from the floor; and

(b) have both audible (beep) and visual (light) signals to indicate that access has been granted.

5.7.4.3 Keypads

A keypad shall

(a) be located at a height between 800 and 1200 mm from the floor;

(b) be colour-contrasted with the background;

(c) have characters that are colour-contrasted with the keys; and

(d) if numeric, be telephone type and have a raised dot on the number 5 that

  (i) is 0.7 ± 0.1 mm high; and

  (ii) has a base 1.5 mm in diameter.

Commentary:

The keypad should be angled to be usable from both a standing and a seated position.

5.7.4.4 Security gates or screens

Security gates or screens shall

(a) comply with Clause 5.2.12; and

(b) where queue systems are used, have both audible (beep) and visual (light) signals to indicate "proceed" and "stop" instructions.

6 Interior facilities

6.1 Drinking fountains

6.1.1 Spouts

A spout shall

(a) have the opening between 750 and 900 mm from the floor (see Figure 37);

(b) be located at the front of the unit;

(c) direct the water flow in a trajectory that is parallel or nearly parallel to the front of the unit; and
(d) provide a water flow at least 100 mm high.

Commentary:

(1) The provision of two drinking fountains at different heights meets the needs of most people.
(2) The height of the water flow allows for the insertion of a cup or glass.

Δ 6.1.2 Controls

Controls shall
(a) not be foot-operated;
(b) allow the user to control the timing and water delivery height;
(c) comply with Clause 4.2; and
(d) be located either on the front or on both sides of the fountain.

Δ 6.1.3 Floor area

A drinking fountain shall have a clear floor area of at least 800 × 1350 mm in front of the unit (see Figure 37).

Commentary:

(1) Locating the drinking fountain out of the route of travel is preferred.
(2) Recessing the drinking fountain in an alcove removes it as a hazard.

6.1.4 Colour contrast

A drinking fountain shall be colour-contrasted with the background.

6.1.5 Cantilevered fountains

A cantilevered drinking fountain shall
(a) have a knee clearance between the bottom of the apron and the floor at least 750 mm wide × 200 mm deep × 680 mm high (see Figure 38);
(b) have a toe space at least 750 mm wide × 230 mm deep × 230 mm high; and
(c) be cane-detectable, recessed, or otherwise located out of the route of travel (see Figure 37).

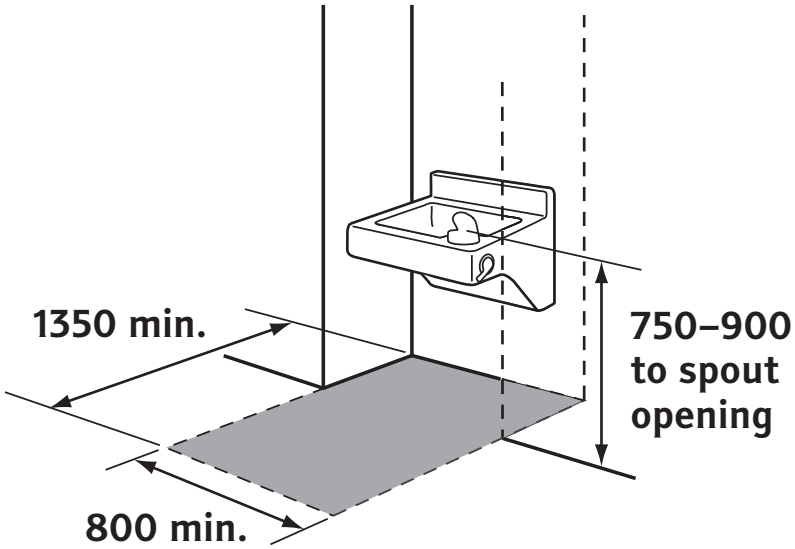

(a)

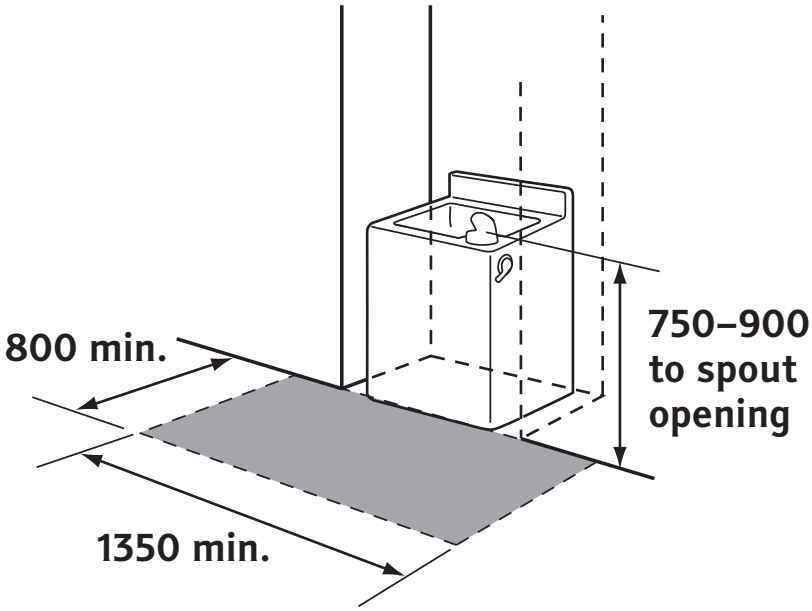

(b)

Δ **Figure 37**
Recessed drinking fountain
(See Clauses 6.1.1, 6.1.3, and 6.1.5.)

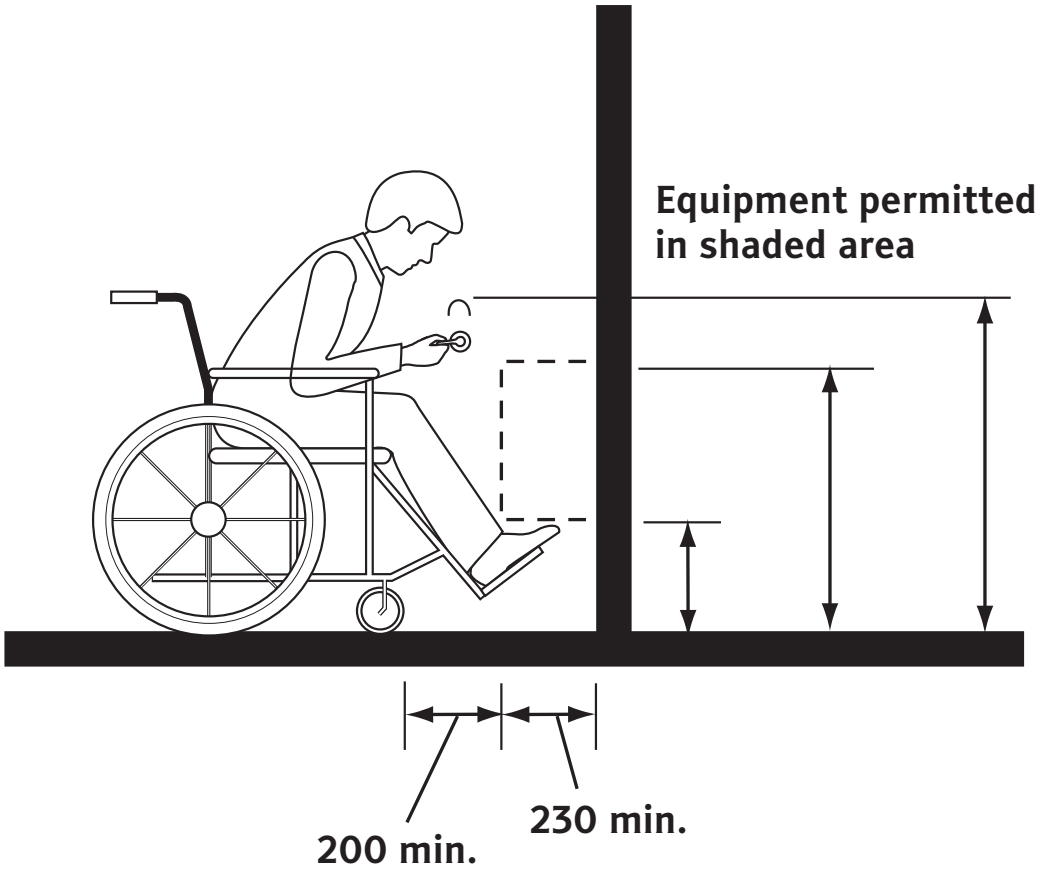

Figure 38
Spout height and knee clearance at cantilevered fountain
(See Clauses 6.1.5 and 8.6.5.)

6.2 Washroom facilities

Commentary:

(1) All public washrooms should provide an accessible lavatory, toilet stall, urinal (where applicable), and accessories.

(2) As a supplement to providing accessible features in all male and female public washrooms, universal washrooms should also be provided to accommodate a variety of users, including parents with children or a person with an attendant or spouse (see Clause 6.3).

(3) In existing buildings, if it is difficult to provide accessible male and female washrooms, then universal washrooms can be substituted.

6.2.1 Identification

Signs at washroom entrances shall

(a) comply with Clause 4.5;

(b) if there is no door, be mounted on the outside walls, on both sides of the entrance opening; and

(c) if the washroom is not accessible, indicate the location of the nearest accessible washroom.

6.2.2 Floor area

A clear floor area shall be provided

(a) at the door, if there is one, to comply with Clause 5.2.2; and

(b) in the interior, at least 1500 × 1500 mm in front of the accessible stall (see Figure 39).

Commentary:

When entering and leaving washrooms, persons with disabilities frequently encounter difficulties. Entrances without doors are easier for all persons to use, and, if doors are required, there should be a single door rather than two doors in series.

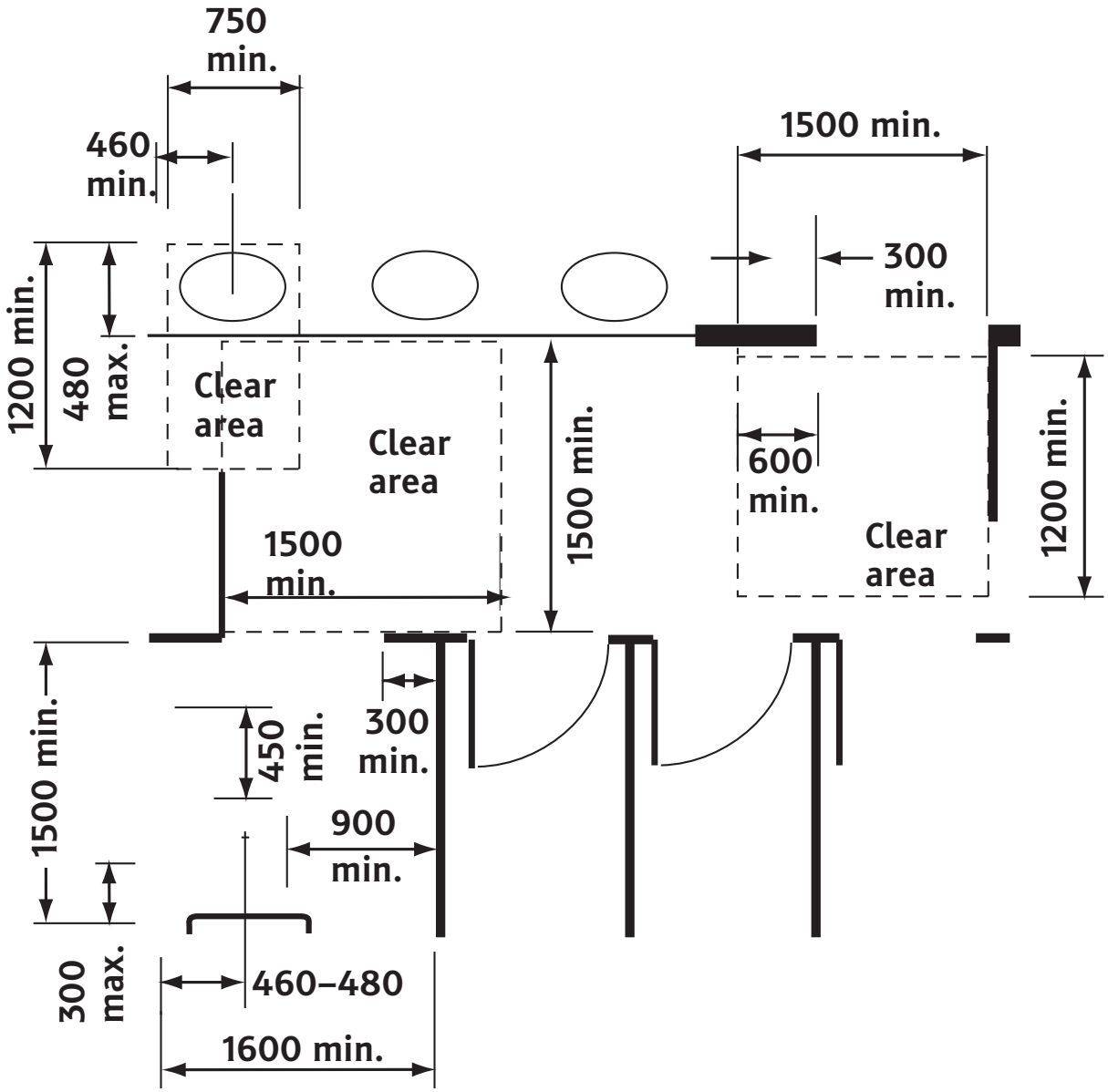

Δ

Figure 39
Example of a washroom layout
(See Clauses 6.2.2 and 6.2.7.2.)

6.2.3 Lavatories

Δ 6.2.3.1 General

A lavatory shall

(a) be mounted with the centreline at least 460 mm from a side wall;

(b) have the top located between 810 and 860 mm from the floor;

(c) have a knee clearance centred on the lavatory at least 750 mm wide × 200 mm deep × 685 mm high with an additional toe clearance at least 750 mm wide × 230 mm deep × 230 mm high;

(d) have a clear floor area centred on the lavatory at least 800 × 1350 mm, of which not more than 480 mm is under the lavatory; and

(e) have hot water and drain pipes offset to the rear [see Figures 40(a) and (b)].

Commentary:

(1) If hot water and drain pipes abut the clearances noted above, they should be insulated.

(2) Lavatories that are shallow, with a long protruding lip and a goose-neck faucet, should not be used. When the water hits the shallow sink, it tends to splash the user. Where the faucet handles are too far back, they might be difficult to reach.

(3) Lavatories should not be placed on pedestals.

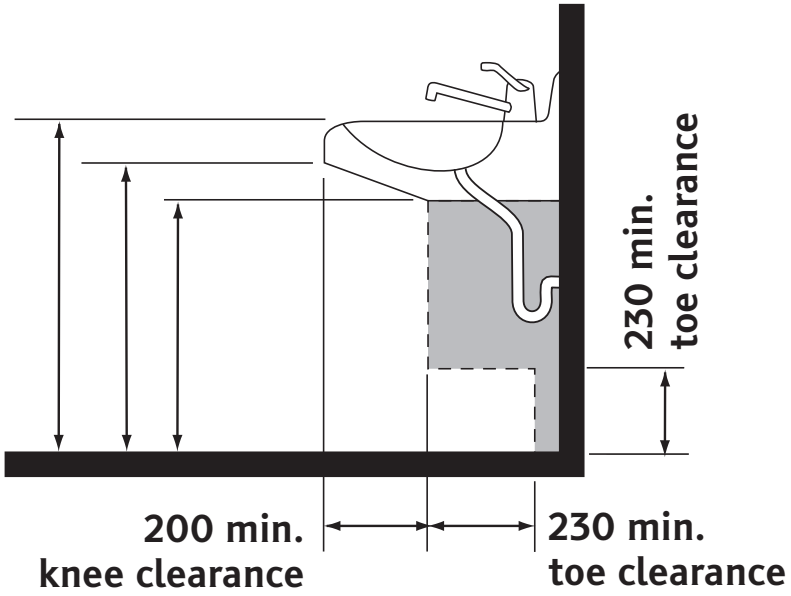

(a)

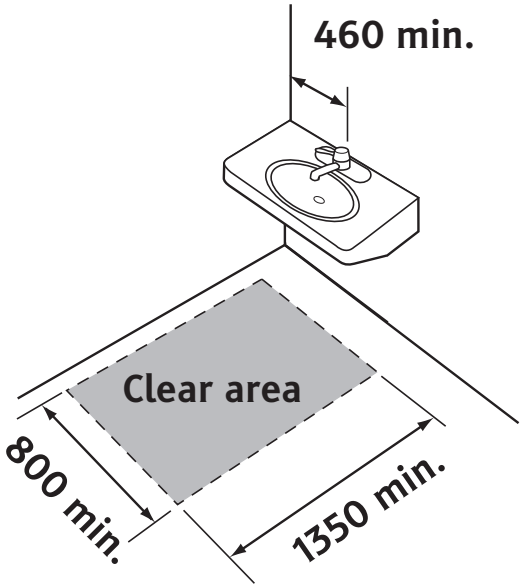

(b)

Δ **Figure 40**
Lavatory clearances
(See Clauses 6.2.3.1 and 6.2.3.2.)

6.2.3.2 Lavatory counters

A lavatory counter with a front apron shall have a knee clearance centred on the lavatory at least 750 mm wide × 720 mm high [see Figures 40(a) and (b)].

Commentary:

While it is desirable to have lavatories set in a counter, clearance under a lavatory is required for wheelchair access.

6.2.3.3 Faucets

Faucets and other controls shall

(a) comply with Clause 4.2;
(b) not require the application of continuous force to maintain water flow;
(c) where metered, provide at least 10 s of flow; and
(d) where handles are used, have lever-type handles that are operable with a closed fist (see Figure 41).

Commentary:

(1) The lever in the off-position should be angled to the front.
(2) Hot and cold faucets for lavatories, bathtubs, and showers should be oriented consistently.

6.2.3.4 Water temperature

The temperature of the water supplied to the lavatory shall not exceed 49 °C.

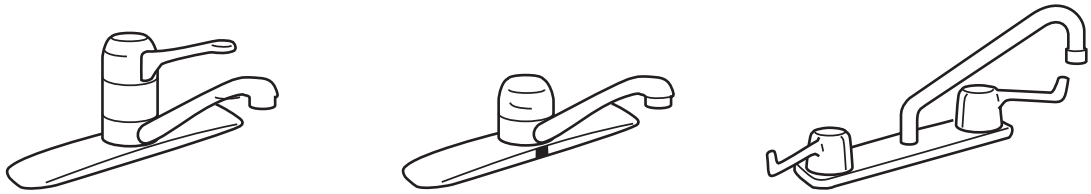

Single lever handle | Automatic faucet | Long lever handles

Acceptable

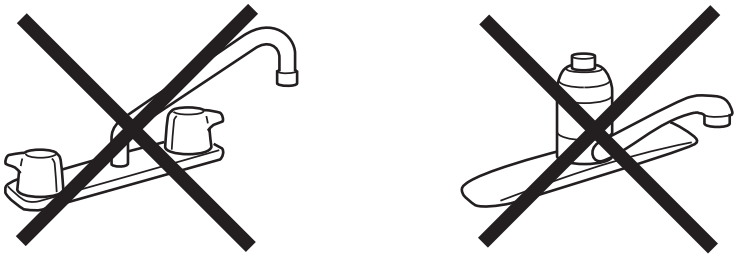

Knob handle | Push operated

Not acceptable

Figure 41
Faucets
(See Clause 6.2.3.3.)

6.2.4 Washroom accessories

6.2.4.1 Operation

The operable parts and controls of at least one of each type of washroom accessory shall comply with Clause 4.2.

Commentary:

Accessories such as towel dispensers and waste receptacles should be placed close to the lavatory and not protrude into the route of travel.

6.2.4.2 Mirrors

A mirror shall be mounted with its bottom edge not more than 1000 mm from the floor (see Figure 42).

Commentary:

(1) Tilted mirrors should not be used.
(2) A full-length mirror should not be installed where it would reflect the route of travel.

6.2.4.3 Soap dispensers

Where a soap dispenser is provided at the accessible lavatory, it shall be

(a) located within a 500 mm reach of a person seated at the lavatory;
(b) no higher than 1100 mm; and
(c) operable with one hand to dispense soap on the palm of that hand (see Figure 42).

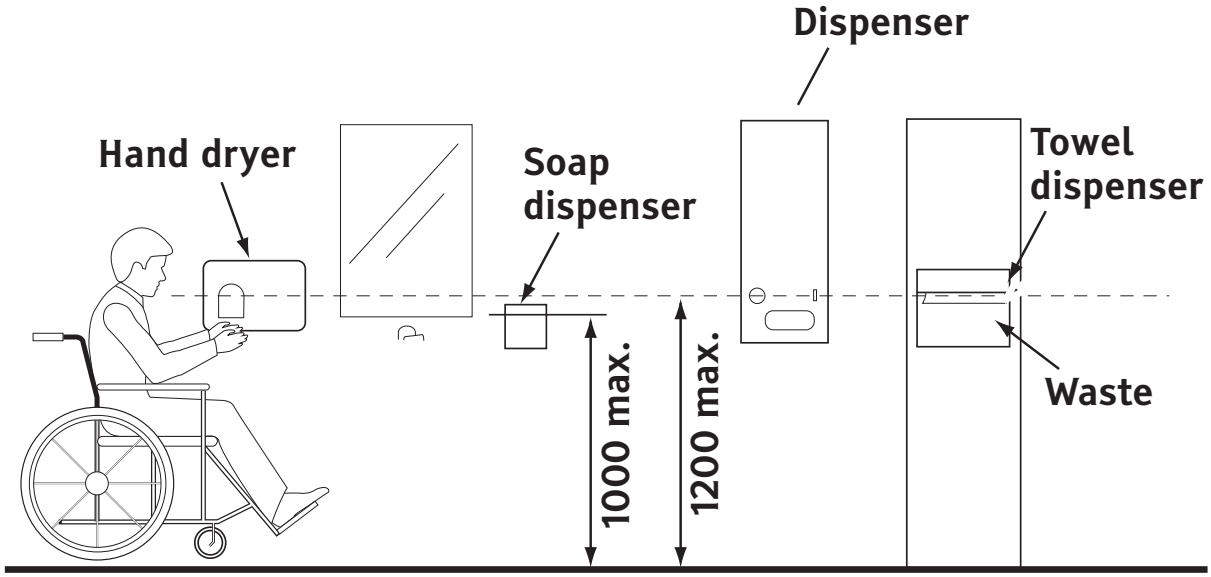

Figure 42
Washroom accessory heights
(See Clauses 6.2.4.2 and 6.2.4.3.)

6.2.5 Grab bars

6.2.5.1 Size and spacing

A grab bar shall

(a) be slip-resistant;
(b) have a diameter between 30 and 40 mm;
(c) where mounted adjacent to a wall, have a space between 35 and 45 mm between the wall and the grab bar; and
(d) not rotate within its fittings.

6.2.5.2 Structural strength

A grab bar shall be installed to resist a force of at least 1.3 kN applied in any direction.

6.2.5.3 Surfaces

A grab bar and adjacent surfaces shall be free of any sharp or abrasive elements.

6.2.6 Toilets

Δ 6.2.6.1 Toilet fixtures

A toilet fixture shall have

(a) the top of the seat between 430 and 485 mm from the floor (see Figure 43);
(b) no spring-activated seat;
(c) a back support where there is no seat lid or tank; and
(d) where there is a tank, a tank lid that is securely attached.

Commentary:

(1) Wall-hung toilets are preferred because they provide additional space at toe level.
(2) Preferences for toilet seat heights vary considerably. Higher seats can be an advantage to some ambulatory persons with disabilities, but a disadvantage to persons in wheelchairs.
(3) Toilet seats 400 to 460 mm high offer a reasonable compromise. Thick seats and filler rings are available to adapt standard fixtures to these requirements.
(4) A back support reduces the chance of imbalance or injury caused by leaning against exposed valves or pipes. A toilet seat lid is an inexpensive means of providing a back support.

6.2.6.2 Location

A toilet shall

(a) be located with its centreline between 460 and 480 mm from an adjacent wall (see Figure 43); and
(b) have a clear transfer space at least 900 mm wide × 1500 mm long on its open side, the width measured from the edge of the toilet bowl (see Figure 44).

Δ 6.2.6.3 Controls

Flush controls shall

(a) be automatically activated; or

(b) be hand-operated by a device that

  (i) complies with Clause 4.2.1, 4.2.3, 4.2.4, 4.2.5, and 4.2.8; and

  (ii) is not more than 350 mm from the transfer space side of the toilet.

Commentary:

(1) Flush valves can be located beside the toilet or above and behind the toilet seat, and the related plumbing can be located behind the wall, or beside or behind the toilet.

(2) Flush controls for tank-type toilets have a standard mounting location on the left side of the tank when facing the tank.

(3) Tanks with controls mounted on the right side are often available by special order.

(4) Where flush controls are automatically activated, they should be supplemented with a manually operated control. The manual flush control should comply with Clause 4.2.

Δ 6.2.6.4 Grab bars

Grab bars that comply with Clause 6.2.5 shall be mounted as follows:

(a) There shall be one L-shaped grab bar that is

  (i) mounted on the side wall closest to the toilet; and

  (ii) has horizontal and vertical components that are at least 760 mm long, such that

    (1) the horizontal component is 750 mm to 850 mm above the floor; and

    (2) the vertical component is 150 mm in front of the toilet.

(b) There shall be a horizontal grab bar that is

  (i) mounted on the rear wall;

  (ii) centred over the toilet;

  (iii) not less than 600 mm long; and

  (iv) mounted at the same height as the grab bar on the side wall, except where the toilet has an attached water tank, in which case the grab bar shall be mounted 100 mm above the top of the tank.

Commentary:

(1) A vertical grab bar may be added on the adjacent wall. It should be at least 600 mm in length, located not more than 250 mm in front of the toilet seat, at a height of 900 to 1500 mm from the floor.

(2) Flip-down grab bars are available. They may be added on the same side of the toilet as the transfer space, and the installation should comply with Clause 6.2.5.

(3) Grab bars should colour-contrast with the background.

Δ 6.2.6.5 Toilet paper dispensers

A toilet paper dispenser shall be located

(a) such that the closest edge of the dispenser is 300 mm from the front of the toilet;

(b) at a height between 600 and 800 mm from the floor.

Commentary:

(1) Bulk dispensers that interfere with the effective use of the grab bars should not be used.

(2) Recessed toilet paper dispensers are preferred when using bulk dispensers.

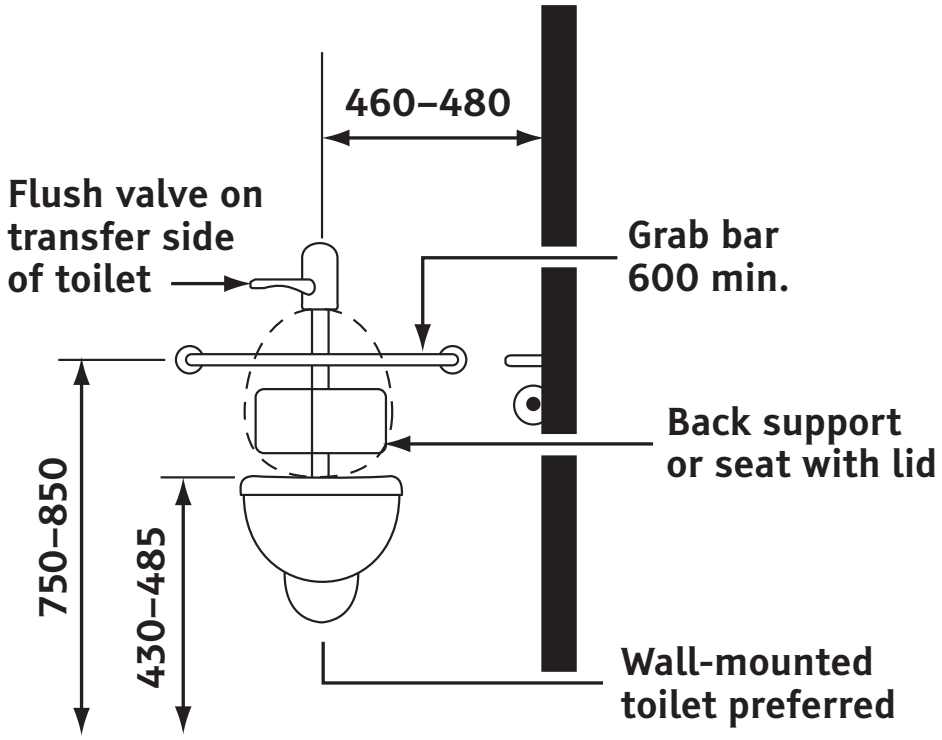

Δ **Figure 43**
Toilet
(See Clauses 6.2.6.1, 6.2.6.2, and 6.2.6.4.)

6.2.7 Toilet stalls

Δ **6.2.7.1 Accessible toilet stalls**

An accessible toilet stall shall have

(a) internal dimensions at least 1600 mm wide × 1500 mm deep (see Figure 44);
(b) a toilet complying with Clause 6.2.6;
(c) a hook on a side wall
  (i) mounted not more than 1200 mm from the floor; and
  (ii) projecting not more than 40 mm from the wall.

Δ 6.2.7.2 Toilet stall doors

Toilet stall doors shall

(a) provide a clear opening of at least 850 mm with the door in the open position;

(b) be aligned with the transfer space adjacent to the toilet, unless the internal dimensions of the toilet stall exceed the minimum values specified in Clause 6.2.7.1 (a), such that there is additional manoeuvring area between the door and the transfer space. (see Figures 39 and 44);

(c) (balance of the clause is the same)have a "D"-type door pull at least 140 mm long, mounted horizontally on the inside of an outswinging door
   (i) with its centreline located between 200 and 300 mm from the hinge edge; and
   (ii) at a height between 800 and 1000 mm from the floor (see Figure 44);

(d) have a "D"-type door pull at least 140 mm long, mounted horizontally on the outside
   (i) with its centreline located between 120 and 220 mm from the latch edge of the door; and
   (ii) at a height between 800 and 1000 mm from the floor;

(e) be self-closing so that when at rest, the door will be ajar not more than 50 mm beyond the jamb;

(f) be latched from the inside by a device that complies with Clause 4.2.4; and

(g) have a clear area at least 1500 × 1500 mm in front of the stall that complies with Clause 5.2.2 (see Figure 39).

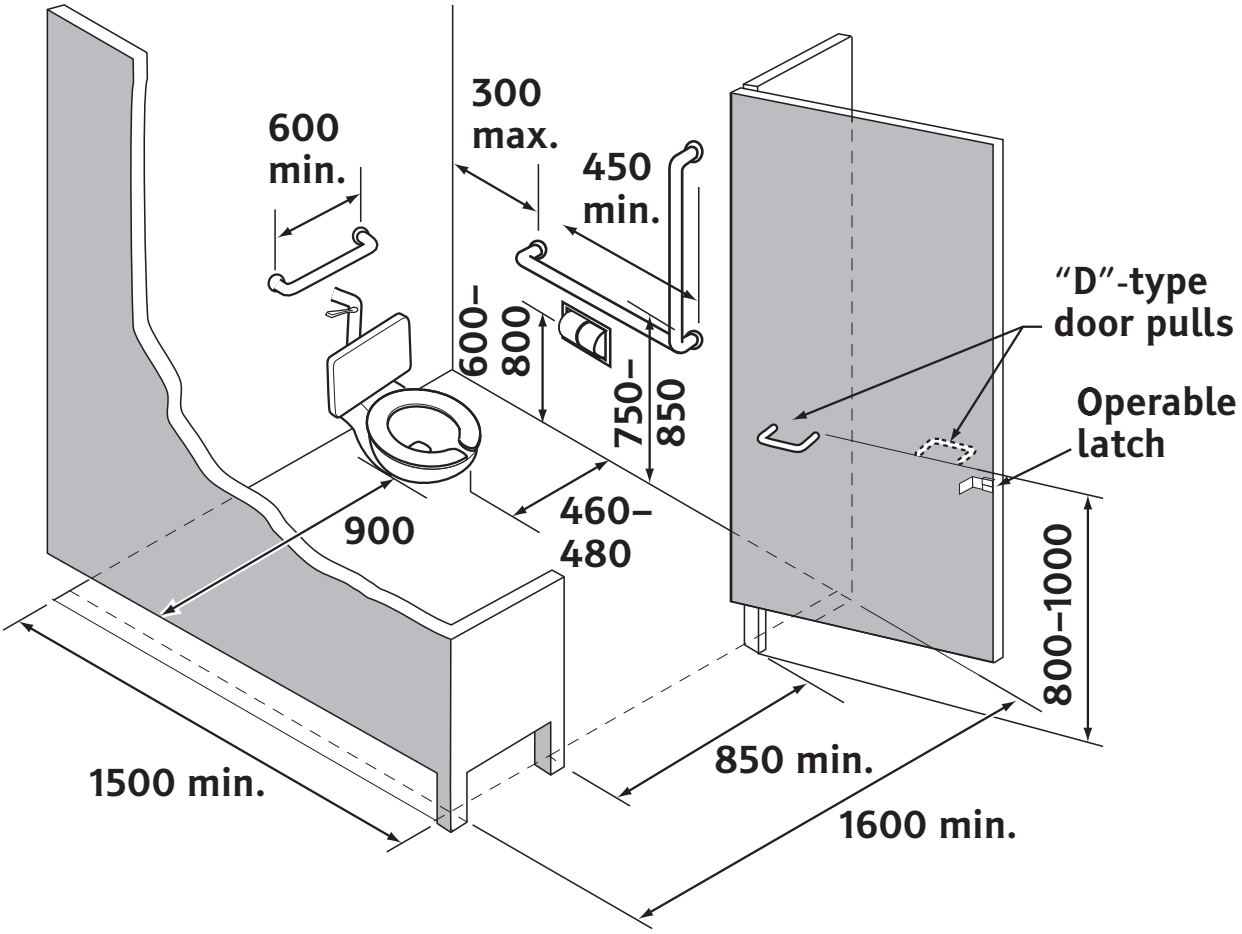

Δ

Figure 44
Toilet stall
(See Clauses 6.2.6.2, 6.2.7.1, 6.2.7.2, and 6.3.2.)

Δ 6.2.7.3 Toilet stalls for users with limited mobility

A toilet stall for users with limited mobility (see Figure 45) shall be a standard-sized stall equipped with

(a) horizontal grab bars, one on each side of the fixture, that
  (i) comply with Clause 6.2.5;
  (ii) are at a height between 750 and 850 mm from the floor;
  (iii) begin not more than 300 mm from the rear wall; and
  (iv) extend at least 450 mm in front of the toilet seat;

(b) a toilet fixture that complies with Clause 6.2.6.1;

(c) a door that
  (i) opens outward
  (ii) is self-closing so that when at rest, the door will be ajar not more than 50 mm beyond the jamb; and
  (iii) is latched from the inside by a device that complies with Clause 4.2.4; and

(d) a sign on the door that
  (i) complies with Clause 4.5; and
  (ii) indicates that the stall is suitable for users who may require grab bar assistance.

Commentary:

(1) This toilet stall is standard-sized, and at least one should be provided to accommodate users with limited mobility, who might have balance, strength, pain, or other problems and would benefit from grab bars to help them sit and rise.

(2) An example of a door sign would be the image of a person with a cane.

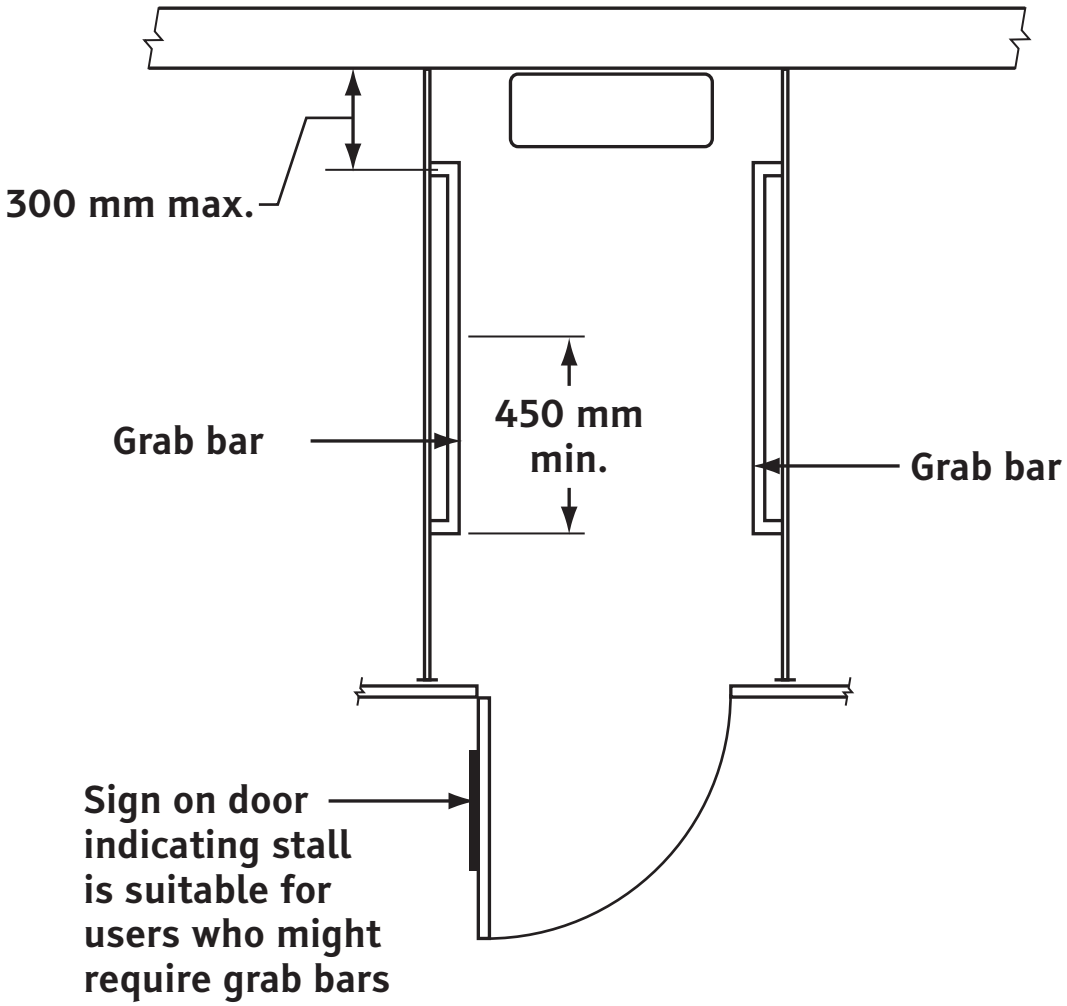

Δ **Figure 45**
Toilet stall for users with limited mobility
(See Clause 6.2.7.3.)

6.2.8 Urinals

Δ 6.2.8.1 General

A urinal shall

(a) be a stall or wall-hung type, with the well located so that
  (i) the lower rim is not higher that 430 mm from the floor; and
  (ii) the upper rim is not lower than 860 mm from the floor;

(b) have a clear floor area in front of the urinal that is
  (i) adjacent to an accessible route;
  (ii) centred on the urinal;
  (iii) at least 800 mm wide x 1350 mm deep; and
  (iv) unobstructed by floor level changes or privacy screens; and
(c) have flush controls that are
  (i) automatically operated; or
  (ii) hand-operated, complying with Clauses 4.2.3 and 4.2.4.

Commentary:
The height range for the urinal well permits use by both seated and standing persons.

Δ **6.2.8.2 Grab bars**

Grab bars that comply with Clause 6.2.5 shall be
(a) at least 600 mm long;
(b) mounted vertically on the back wall
  (i) at each side of the urinal;
  (ii) not more than 380 mm from the centre of the urinal; and
  (iii) with the centre line 1000 mm from the floor; and
(c) colour-contrasted with the back wall (see Figure 46).

6.2.8.3 Centreline indicator

The centreline of a urinal shall be indicated by a vertical element that
(a) is centred on the urinal;
(b) extends to a height of at least 1300 mm from the floor, but never less than 150 mm above the upper urinal rim; and
(c) is at least 50 mm wide;
(d) is raised at least 3 mm from the wall surface; and
(e) is colour-contrasted not less than 70% with the back wall.

Commentary:
(1) The vertical indicator is to facilitate use by persons with visual impairments.
(2) Where more than one urinal is provided in a washroom, all urinals should have a centreline indicator.
(3) Various elements may be used as a centreline indicator, such as exposed piping, architectural features (e.g., raised ceramic tiles), etc.

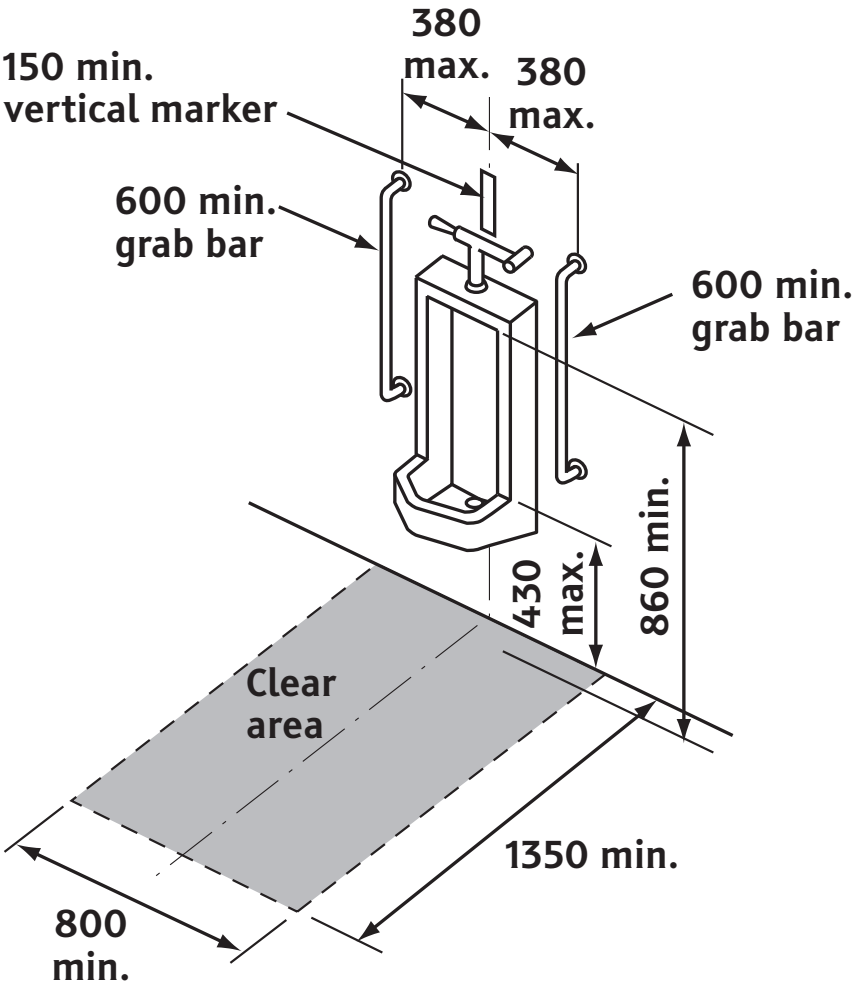

Δ

Figure 46
Urinal
(See Clause 6.2.8.)

6.3 Universal washrooms

Δ 6.3.1 General

Where a universal washroom containing a single toilet and lavatory is provided, it shall

(a) provide a clear area of at least 1500 × 1500 mm;
(b) have a lavatory that complies with Clause 6.2.3;
(c) have a toilet that complies with Clause 6.2.6; and
(d) be identified by a sign that
  (i) complies with Clause 4.5.6; and
  (ii) shows a male and female pictogram and the International symbol of access (see Figures 11 and 12).

Commentary:

(1) A universal washroom (previously called an individual washroom) should be provided to accommodate a variety of users, such as a disabled person with an attendant (perhaps a spouse) or a child with a parent.
(2) The area around the toilet should provide an adequate transfer space for both the person and the attendant (see Figure 47).
(3) Where more than one universal washroom is provided in a facility, the transfer space should be located on opposite sides of the toilet, to accommodate different transferring needs.

6.3.2 Washroom door

A door to a universal washroom shall

(a) comply with Clause 5.2;
(b) have a locking mechanism on the inside that complies with Clause 4.2.4;
(c) be capable of being unlocked from the outside in an emergency situation; and

(d) have either a
  (i) closer, spring-type or gravity hinge; or
  (ii) D-type pull at least 140 mm long, mounted horizontally on the inside of an out-swinging door with its centerline located between 200 and 300 mm from the hinge edge, and at a height between 800 and 1000 mm from the floor (see Figure 44).

Commentary:

(1) Some means of identifying when the washroom is occupied should be provided.
(2) Universal washrooms should be equipped with a power-assisted door opener.

6.3.3 Washroom accessories

Accessories in a universal washroom shall

(a) comply with Clause 6.2.4;
(b) include a shelf or counter at least 200 × 400 mm; and
(c) include a coat hook mounted on a side wall
  (i) at a height not more than 1200 mm from the floor; and
  (ii) protruding not more than 40 mm from the wall.

Commentary:

(1) The shelf should be adjacent to, but not impinge on, the clear space around the lavatory.
(2) In the universal washroom, there should be an emergency call switch that activates an alarm.

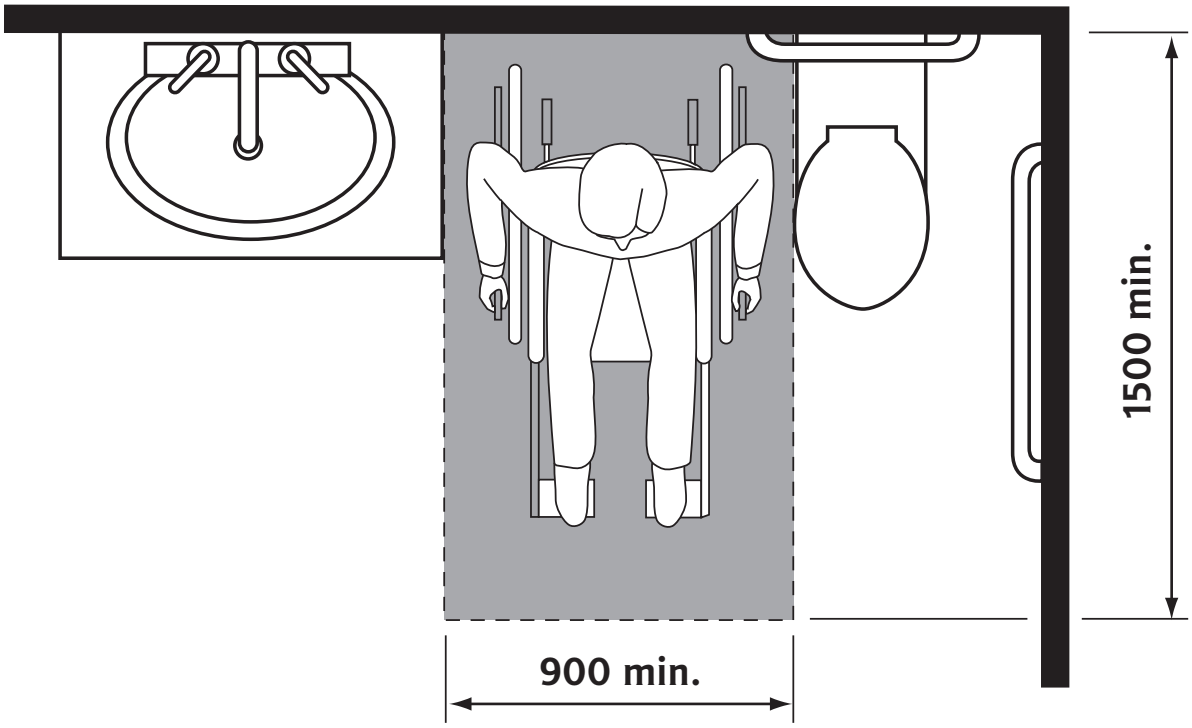

(a)
Clear transfer space beside toilet

Figure 47
Universal washroom
(See Clause 6.3.1.)

(Continued)

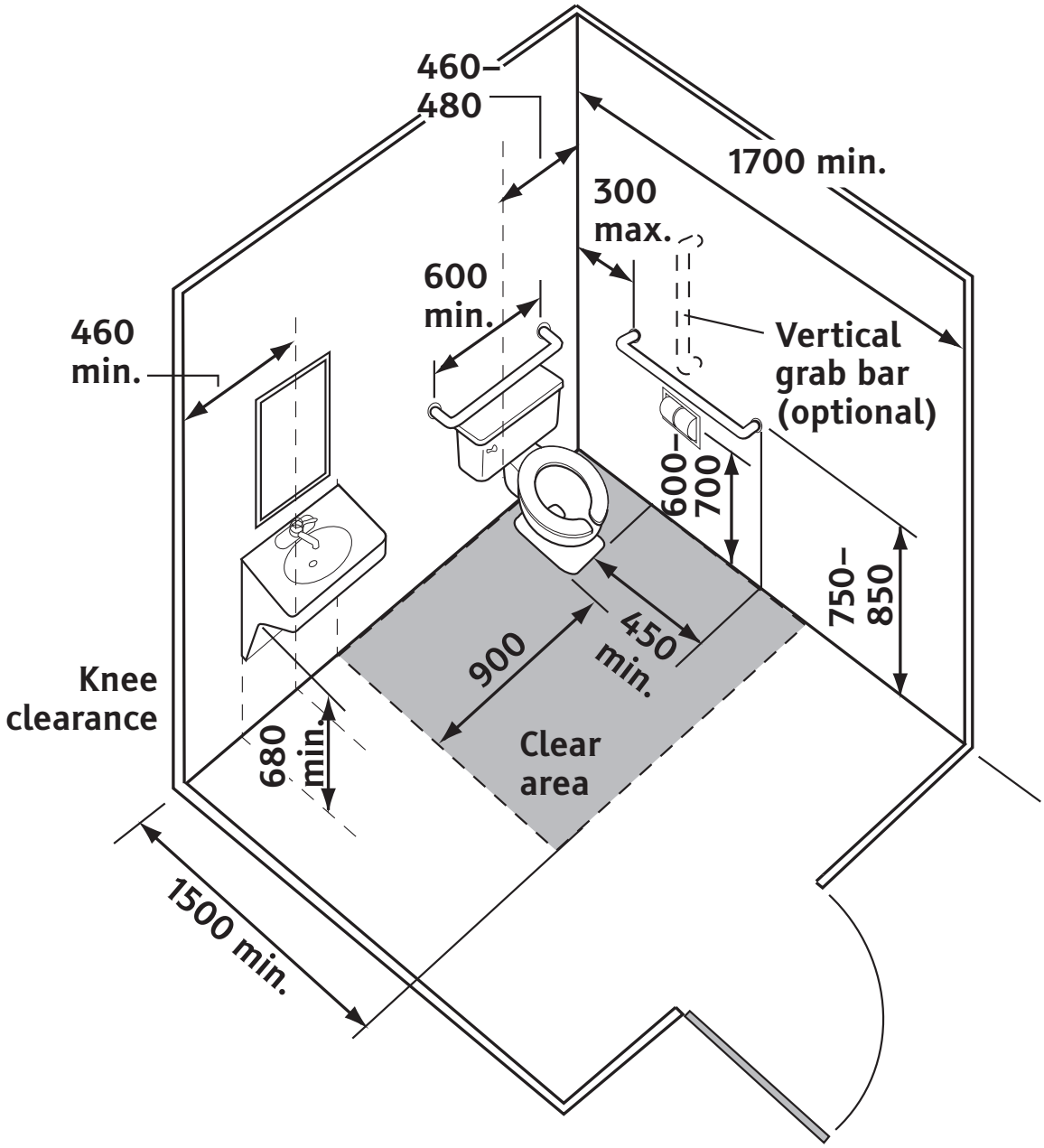

(b)
Example layout

Figure 47 (Concluded)

6.4 Change benches

Where a change bench is provided, it shall

(a) be located on an accessible route;
(b) have an adjacent clear floor area at least 900 mm wide the whole length of the bench;
(c) be at least 760 mm wide × 1830 mm long;
(d) have its top surface between 480 mm and 520 mm from the floor (see Figure 48);
(e) have its surfaces free of sharp edges or abrasive materials;
(f) be easy to clean;
(g) be designed to support a weight of at least 250 kilos; and
(h) have a horizontal grab bar that
    (i) complies with Clause 6.2.5;
    (ii) is centred on the long dimension of the bench;
    (iii) is at least 1200 mm long; and
    (iv) is mounted between 750 mm to 850 mm from the floor.

Commentary:

(1) Benches located in universal washrooms (or in bathing facilities) are of benefit to many individuals, and may be used as change tables. They allow persons with balance or strength problems to sit and allow persons with disabilities to lie down and be changed with the assistance of an attendant, as might be required.

(2) Public facilities in places such as highway rest stops, community centers, recreation centers, shopping malls, etc., should provide such benches in at least one universal washroom.

(3) Change benches are also useful in locker rooms, where people might need to use them to change into swimming suits, etc.

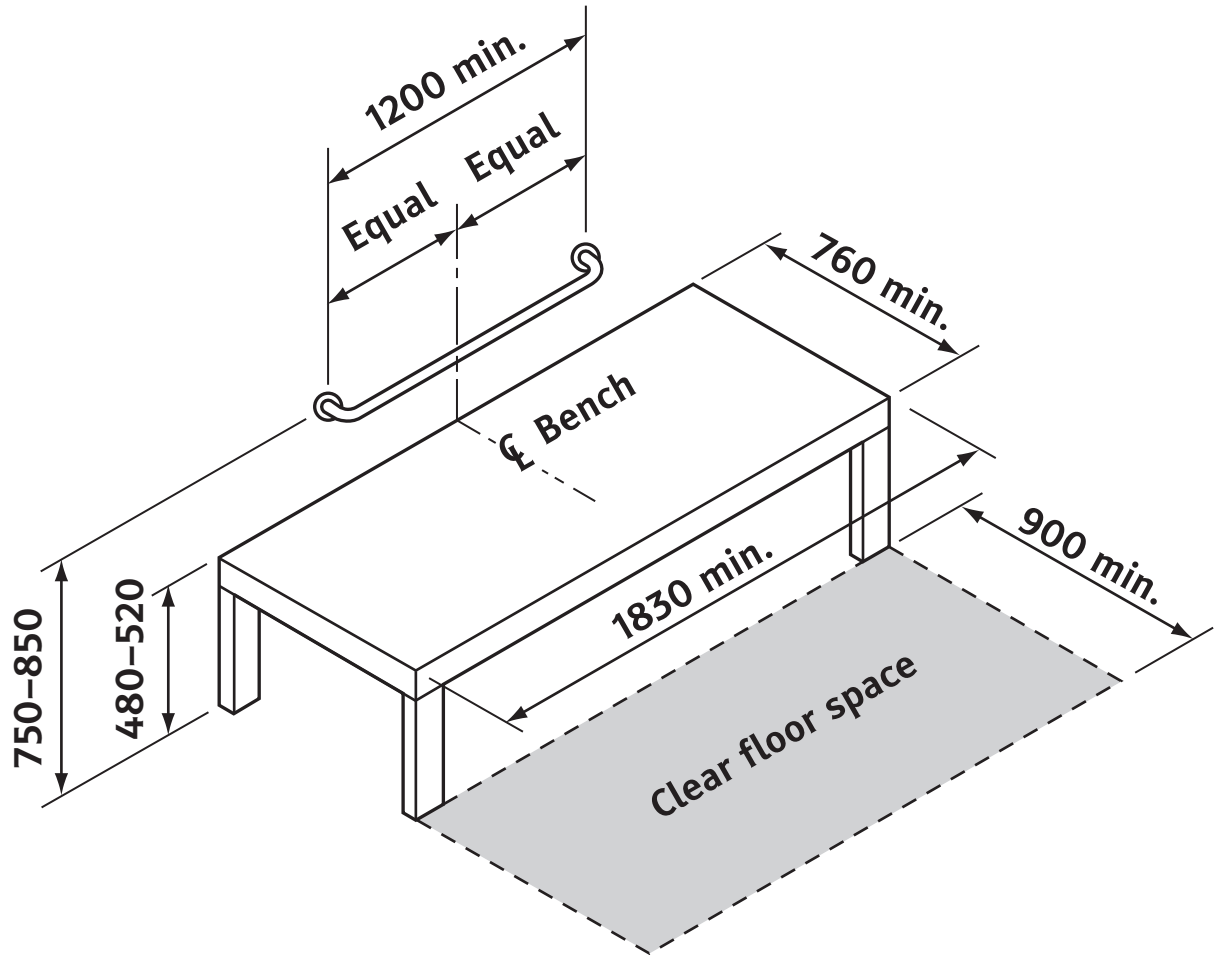

Figure 48
Change bench
(See Clause 6.4.)

6.5 Bathing facilities

6.5.1 Water temperature

The temperature of the water supplied to the shower or bathtub shall not exceed 49 °C.

Δ 6.5.2 Showerheads

A showerhead shall

(a) be of the handheld type;
(b) be provided with a hose at least 1800 mm long;
(c) allow use in a fixed position; and
(d) be mounted vertically
  (i) to be adjustable between 1200 and 2030 mm from the floor; and
  (ii) to not obstruct the use of the grab bars.

6.5.3 Enclosures

Doors or curtains for shower stalls shall not obstruct the controls or the transfer space.

Commentary:

Shower doors, such as those affixed with a floor track or those that might limit the clear opening, should be avoided since they can create obstacles to entering the shower.

6.5.4 Shower floors

The shower floor shall

(a) be slip-resistant even when wet; and
(b) slope minimally to provide positive drainage.

Commentary:

The drain should be located below the seat, or off to one side. See Annex C for guidance on potential for slip of floor finishes.

6.5.5 Roll-in shower stalls

Δ 6.5.5.1 Shower area

Roll-in shower stalls shall have an interior clear area of at least 900 × 1500 mm.

Commentary:

(1) This shower stall can accommodate the use of a wheeled shower chair.

(2) Where possible, the minimum dimension for the stall should be greater than 750 mm.

6.5.5.2 Access area

A clear floor area in front of the shower entrance shall be at least 900 × 1500 mm, with the 1500 mm dimension parallel to the shower entrance (see Figure 49).

6.5.5.3 Grab bars

In a roll-in shower (see Figure 49), four grab bars that comply with Clause 6.2.5 shall be mounted as follows:

(a) one horizontally on a side wall
  (i) at least 600 mm in length; and
  (ii) between 750 and 850 mm from the floor;

(b) one vertically on the opposite side wall
  (i) at least 1000 mm in length;
  (ii) with the lower end between 600 and 650 mm from the floor; and
  (iii) between 50 and 80 mm from the adjacent clear floor area;

(c) one horizontally on the back wall
  (i) at least 1000 mm in length, and
  (ii) between 750 and 850 mm from the floor; and

(d) one vertically on the back wall
  (i) at least 750 mm in length,
  (ii) with the lower edge between 50 and 60 mm above the horizontal grab bar in Item (c); and
  (iii) located between 400 and 500 mm from the side wall on which the other vertical grab bar is mounted.

Commentary:

(1) To expand the usability of this shower stall, a folding seat should be added on the side wall with the vertical grab bar.

(2) The grab bars should be colour-contrasted with the background.

6.5.5.4 Controls

Faucets and controls for roll-in shower stalls shall

(a) comply with Clause 6.2.3.3;
(b) be mounted in the centre on the back wall above the grab bar; and
(c) be not more than 1200 mm from the floor.

6.5.5.5 Thresholds

A threshold at the entrance to a roll-in shower shall

(a) not exceed 13 mm in height; and
(b) if between 7 and 13 mm in height, be bevelled at a slope not steeper than the ratio of 1:2 (50%).

Δ 6.5.5.6 Seat

In roll-in shower stalls, if a seat is provided it shall be

(a) on the wall opposite the controls;
(b) at least 400 mm wide extending the full depth of the stall, less a space allowed for the shower curtain;
(c) with its top between 430 and 480 mm from the floor; and
(d) with a smooth non-slip surface without rough edges.

Commentary:

A seat that folds to a vertical position when not in use will allow persons to use the shower in a seated or standing position. If a seat is included, shower dimensions could need to be increased to maintain clear floor area. The seat should be colour-contrasted.

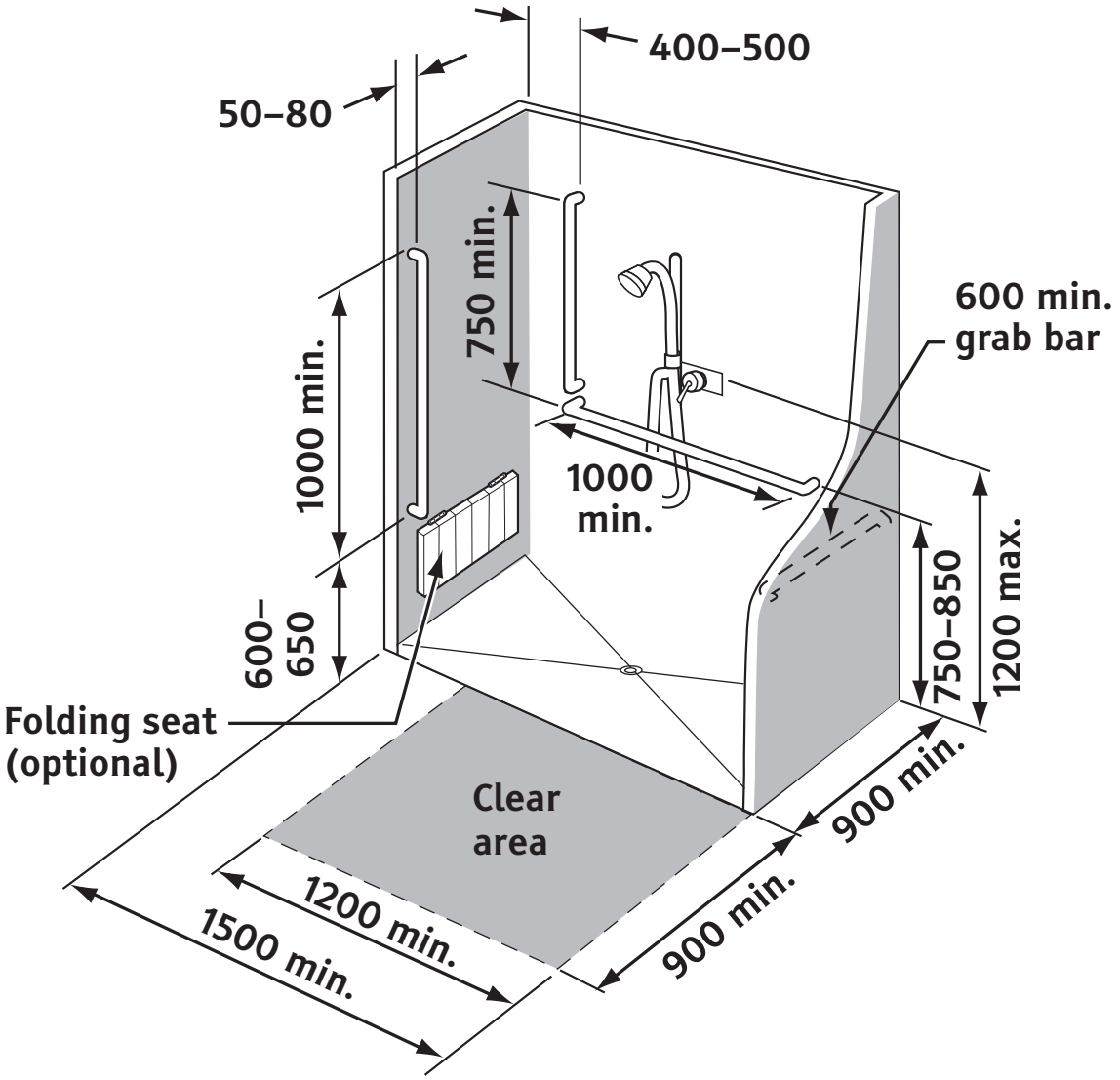

Δ

Figure 49
Roll-in shower stall
(See Clauses 6.5.5.2 and 6.5.5.3.)

Δ 6.5.6 — Deleted

Δ Figure 50— Deleted

Note: Due to the deletion of Clause 6.5.6 and Figure 50, pages 119 and 120 have been deleted. These pages are no longer part of this Standard.

6.5.7 Bathtubs

6.5.7.1 Access area

A clear floor area at least 750 mm wide shall be provided in front of the bathtub, along its whole length (see Figure 51).

Commentary:

To allow easier access to the bathtub, there should be a seat located at the end of the bathtub that runs the width of the bathtub, is 400 mm deep, and is flush with the edges.

Δ 6.5.7.2 Grab bars

Three grab bars that comply with Clause 6.2.5 shall be mounted as follows:

(a) one horizontally, centred on and along the length of the bathtub, that is
   (i) between 180 and 280 mm above the bathtub rim; and
   (ii) at least 1200 mm in length; and

(b) two vertically, at each end of the bathtub adjacent to the clear floor area,
   (i) whose lower ends are between 180 and 280 mm above the bathtub rim;
   (ii) that are at least 1200 mm in length; and
   (iii) that are between 80 and 120 mm from the adjacent clear floor area (see Figure 51).

Commentary:

(1) The vertical grab bar should not interfere with the shower curtain.
(2) Grab bars in prefabricated units may be used if they comply with Clause 6.2.5.
(3) The grab bars should be colour-contrasted with the background.

6.5.7.3 Controls

Faucets and other controls shall

(a) comply with Clause 6.2.3.3;

(b) be located at the foot end of the bathtub between the centreline of the bathtub and the clear floor area; and

(c) be not more than 450 mm above the bathtub rim.

Commentary:

Controls located close to the open side can be reached more easily.

Δ ### 6.5.7.4 Enclosures

Enclosures employing sliding doors or tracks on the rim shall not be provided on bathtubs.

6.5.7.5 Bathtub base

Bathtubs shall have a slip-resistant base.

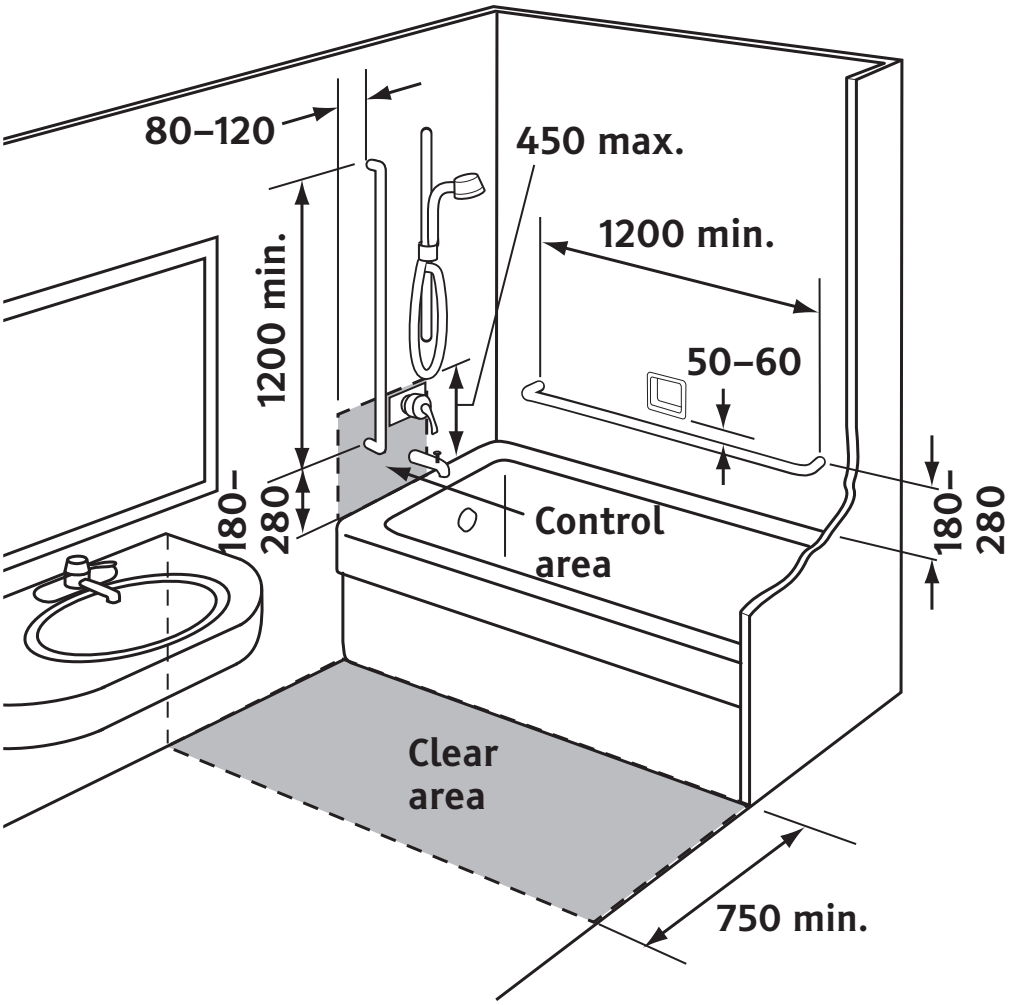

Figure 51
Bathtub area and grab bars
(See Clauses 6.5.7.1 and 6.5.7.2.)

6.6 Communications

6.6.1 Assistive listening systems

Where an assistive listening system is provided, an induction loop, infrared system, or radio frequency system shall be used.

Commentary:

(1) Assistive listening systems amplify audible communication and can be used by persons who are hard of hearing, with or without hearing aids. They do not interfere with the listening enjoyment of people who are not hard of hearing.

(2) All three systems transmit a signal. Special-purpose receivers are required for infrared and radio frequency systems, while hearing aids equipped with a T-switch are capable of receiving the signal from an induction loop system. Receivers for such systems can be equipped to be compatible with hearing aids with T-switches or audio input capability. Hard-wired systems can meet this requirement when provisions are made to accommodate persons with hearing aids.

(3) The choice and size (power) of the system will depend on the type of application and the size of the facility (e.g., assembly areas, cinemas, meeting rooms, etc.).

(4) The symbol of accessibility for persons who are deaf or hard of hearing (see Figure 52) should be used to indicate the existence of such a facility.

6.6.2 Public telephones

6.6.2.1 Protruding parts

Telephones, enclosures, and related equipment shall comply with Clause 4.4.

6.6.2.2 Operating devices

A telephone shall have

(a) a keypad and function keys that comply with CSA T516; and

(b) its operable parts, including the coin slot,

  (i) not more than 1370 mm from the floor; or

  (ii) not more than 1200 mm from the floor if the telephone is designed for use by seated persons.

6.6.2.3 Cord length

The handset cord length shall be at least 1000 mm.

6.6.2.4 Illumination

The illumination level measured at the operating devices, directory, and shelf shall be at least 200 lx.

6.6.2.5 Telephones for standing persons

At the telephone, a level shelf shall

(a) be at least 450 mm wide × 300 mm deep;
(b) where no teletypewriter (TTY) or text telephone (TT) is provided, have a clear space above it at least 250 mm high × 225 mm wide [see Figure 53(b)]; and
(c) be at a height between 730 and 860 mm from the floor.

Commentary:

Persons who use a TTY or TT may carry their own unit and require shelf space for it.

Δ ### 6.6.2.6 Telephones for seated persons

At the telephone, a clear floor area shall

(a) be at least 800 mm wide × 1350 mm deep, which shall extend not more than 480 mm under the shelf; and
(b) have a knee clearance between 680 and 730 mm high [see Figure 53(a)].

Commentary:

If a seat is provided, the seat should be movable so that a person using a wheelchair can approach and use the telephone.

6.6.2.7 Telephones for persons who are hard of hearing, deafened, deaf, or speech-impaired

6.6.2.7.1 Volume control

A telephone with a volume control shall

(a) comply with CAN/CSA-T515;
(b) have a graduated volume control; and
(c) be identified by the symbol of accessibility for persons who are hard of hearing (see Figure 52).

Commentary:

(1) Phones with volume control are primarily used by people who are hard of hearing, but they are useful for everyone in locations with high noise levels.

(2) If more than one type of telephone is provided (e.g., card, coin, internal, taxi call), at least one of each type should be provided for use by both a seated person and a hard of hearing or deaf person.

(3) If only one telephone is provided, it should allow for operation by a seated person and by a person who is hard of hearing, deafened, or deaf. If more than one telephone is provided, at least one should be for operation by a seated person, and at least one by a person who is hard of hearing, deafened, or deaf.

(a) (b)

Figure 52
Symbols of accessibility for persons who are hard of hearing
(See Clauses 6.6.1 and 6.6.2.7.1.)

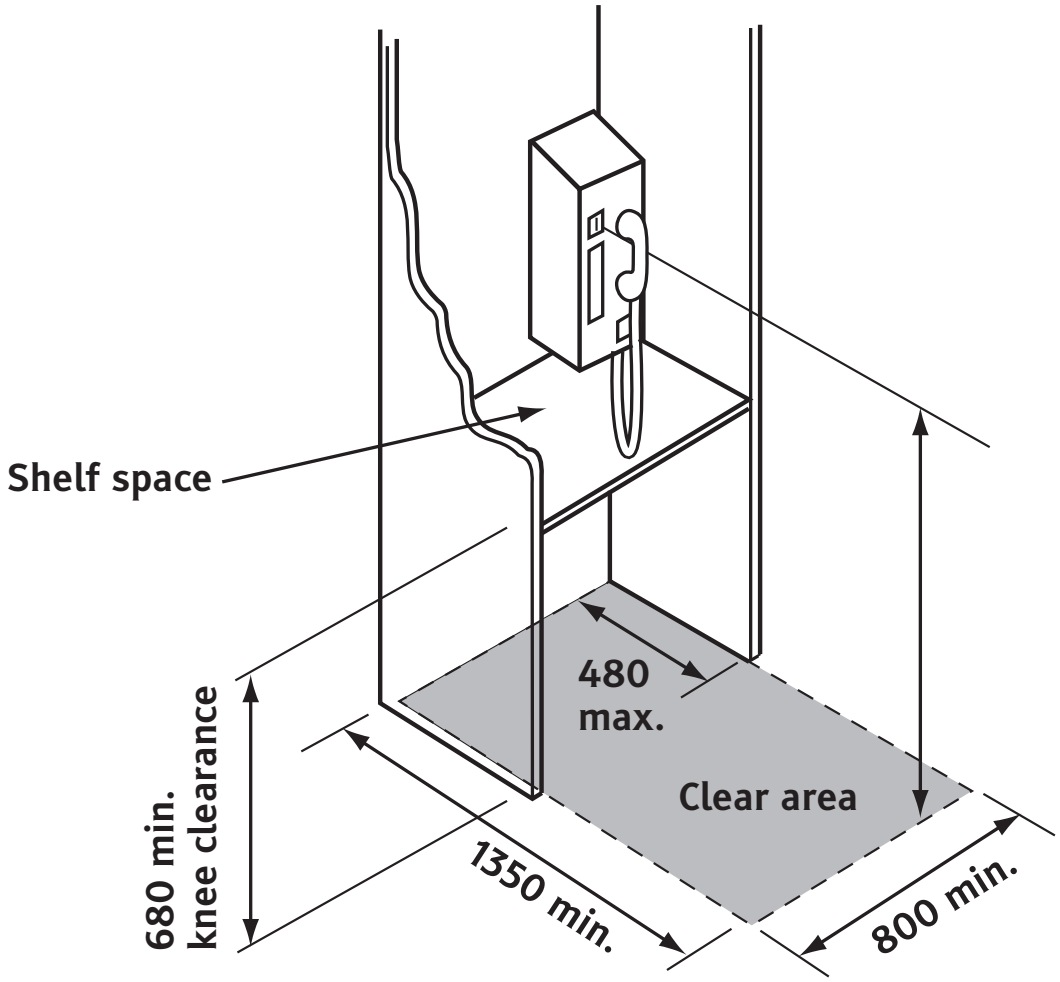

(a) Telephone for a seated person

Δ

Figure 53
Telephone height and shelf
(See Clauses 6.6.2.5 and 6.6.2.6.)

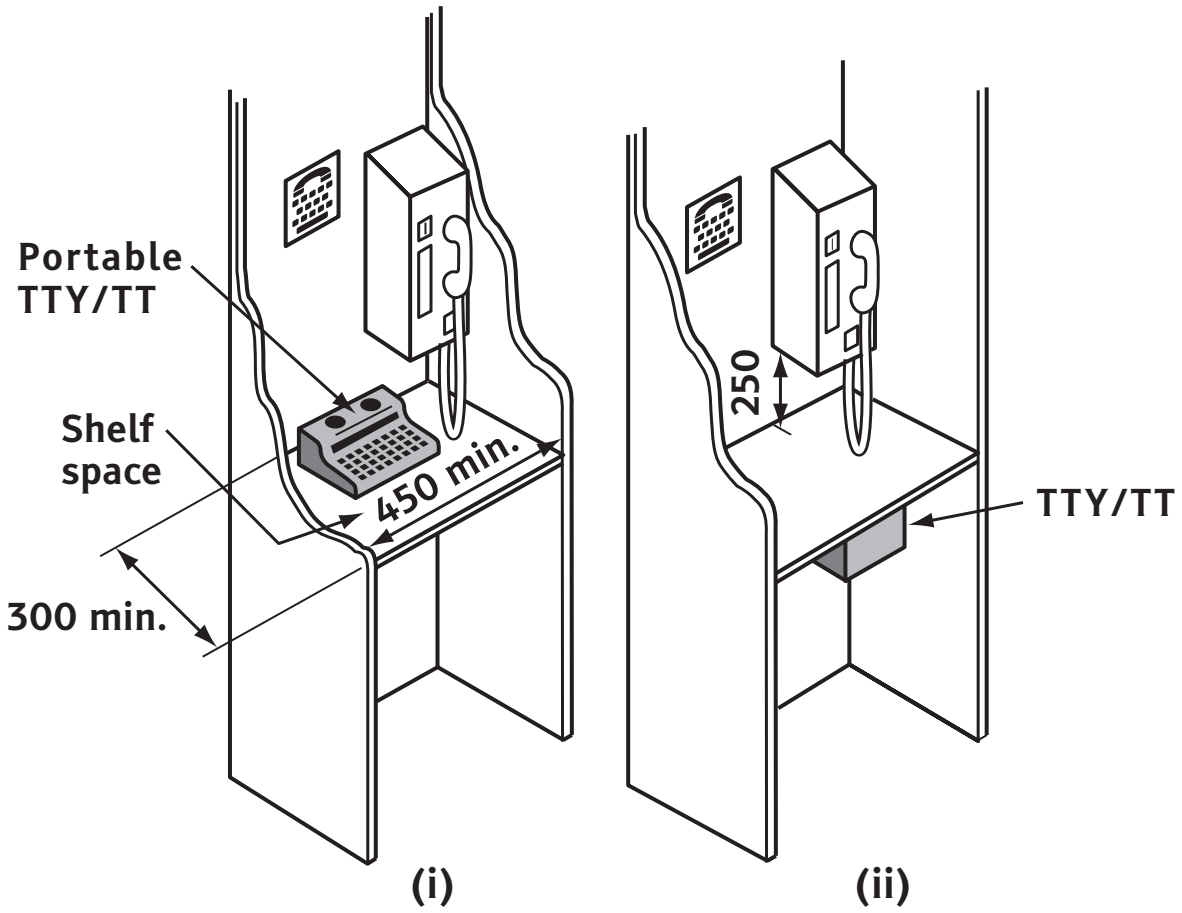

(b) Options for TTY/TT telephones

Figure 53 (Concluded)

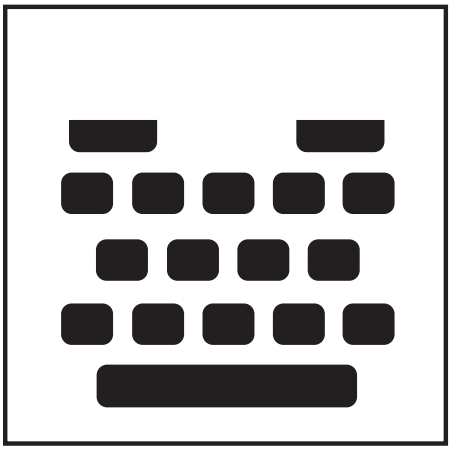

Figure 54
Symbol for teletypewriter (TTY)
(See Clause 6.6.2.7.2.)

6.6.2.7.2 Identification of teletypewriter

Where a teletypewriter (TTY) or a text telephone (TT) is provided at a public telephone, it shall be identified by the symbol for a TTY (see Figure 54).

Commentary:

(1) TTYs and TTs transmit visual text via the telephone system. They are used by many people who are deaf, deafened, hard of hearing, or speech-impaired, as well as by those who wish to communicate with them.

(2) Public telephones equipped with a TTY or TT are available, and at least one should be provided in public areas.

(3) If only one TTY or TT is provided, it should be located at the telephone for a standing position.

6.6.2.8 Directional signs

When directional signs to telephones are provided, they shall include the appropriate symbols of accessibility.

6.7 Seating

6.7.1 Spaces at tables and counters

Δ **6.7.1.1 Floor area**

A seating space for persons in a wheelchair, such as that provided at counters, tables, or work surfaces, shall have

(a) a clear floor area not less than 800 × 1350 mm [see Figure 55(a) and (b)]; and

(b) adequate manoeuvring space to approach it.

Commentary:

A forward approach for seating at tables and work surfaces is preferred.

6.7.1.2 Height

A table or counter surface shall be at a height between 730 and 860 mm from the floor.

6.7.1.3 Knee clearance

Where a forward approach is used, the knee clearance shall be at least 750 mm wide × 480 mm deep × 680 mm high, which may overlap the clear floor area by not more than 480 mm [see Figure 55(a)].

Commentary:

Other than at tables and counters, height and knee clearances might have different requirements.

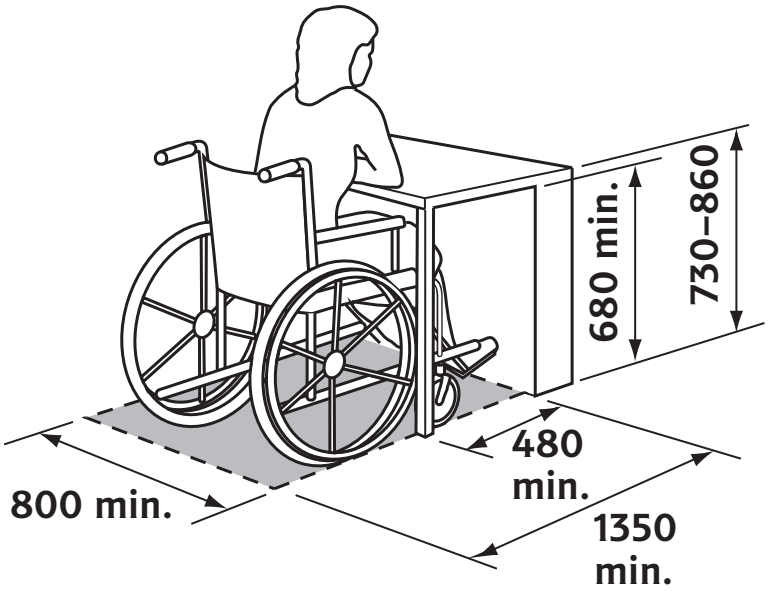

(a)

Δ **Figure 55**
Seating at tables and counters
(See Clauses 6.7.1.1 and 6.7.1.2.)

(Continued)

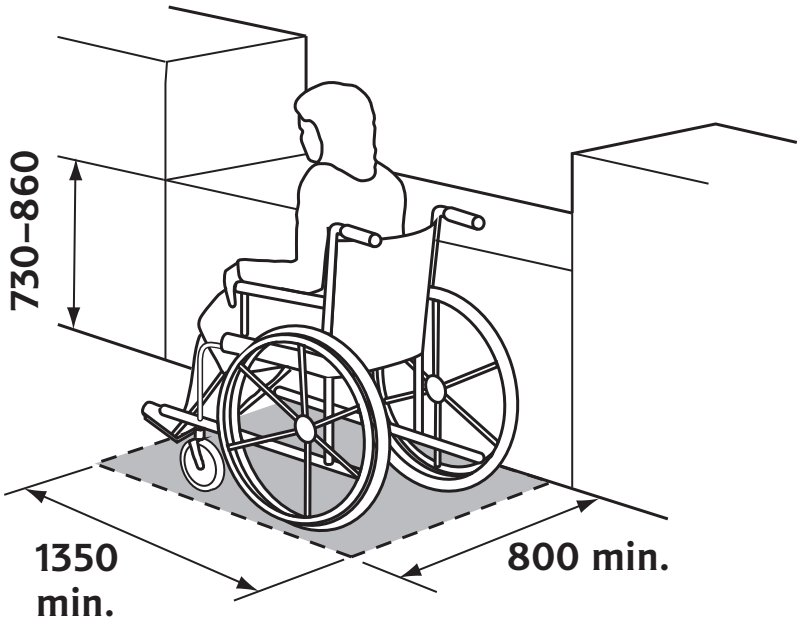

(b)

Δ **Figure 55 (Concluded)**

6.7.2 Rest area seating

6.7.2.1 Bench or seat area

A bench or seat area shall

(a) be located adjacent to an accessible route;
(b) have a level and firm surface; and
(c) have an adjacent level and firm area at least 850 × 1200 mm that is not part of the route of travel.

Commentary:

(1) Benches or seats should be set back from the accessible route.
(2) The level area adjacent to the seat may accommodate a user with a wheelchair, a service animal, stroller, walker, etc. (see Figure 56).

(3) The ground or floor surface of the seating area should contrast in colour and texture with the surrounding surface.

6.7.2.2 Benches or seats

A bench or a seat shall

(a) be stable;

(b) have a seat height between 450 and 500 mm from the floor; and

(c) where there is more than one, provide a mix of options, i.e., some with back rests, some with arm rests, and some with both.

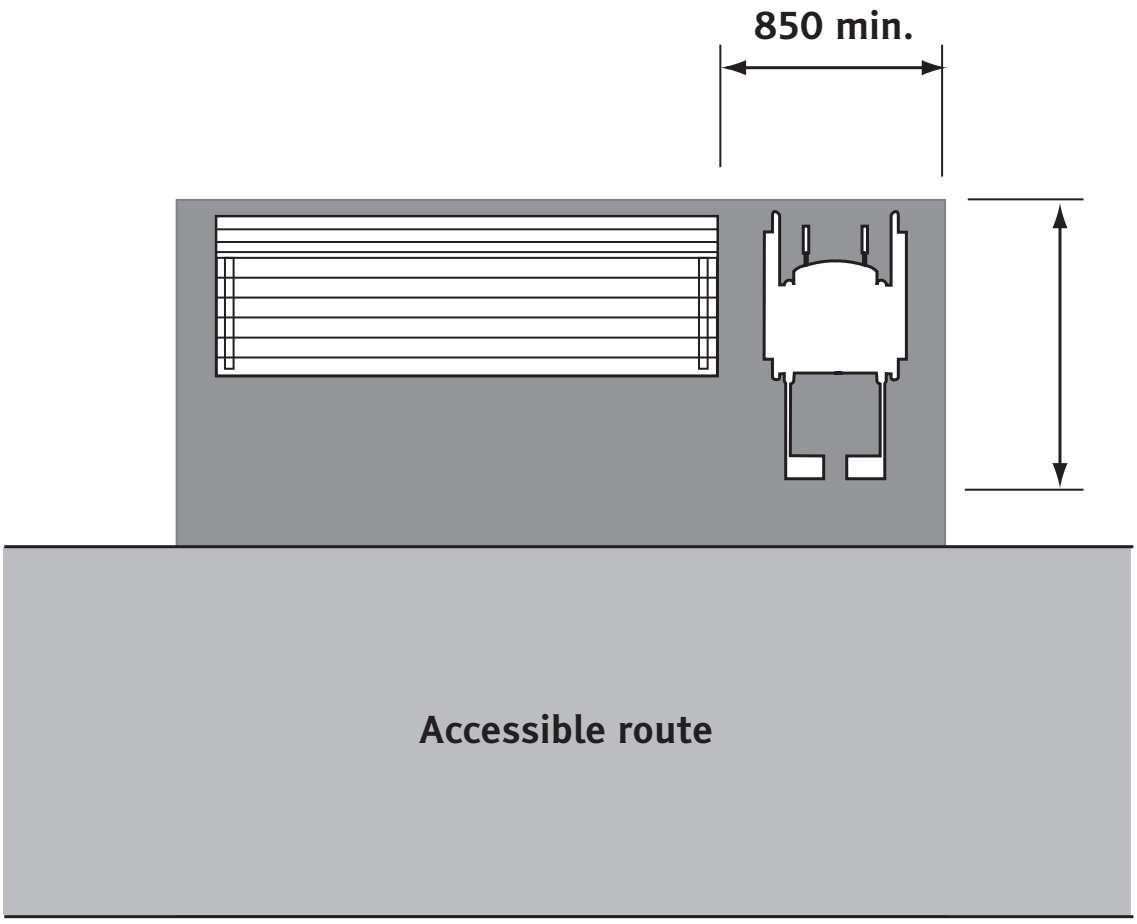

Figure 56
Bench area
(See Clauses 6.2.7.1 and 8.6.3.1.)

6.7.3 Viewing spaces in assembly areas

6.7.3.1 Floor area

A clear floor area for a wheelchair viewing space shall be

(a) at least 850 × 1200 mm; and
(b) on a clear and level surface.

6.7.3.2 Location of viewing spaces

A wheelchair viewing space shall

(a) adjoin the accessible circulation routes adjacent to a means of egress;
(b) be an integral part of the seating plan;
(c) be dispersed throughout the seating area on all levels (see Figure 57);
(d) be located adjacent to other seating; and
(e) provide for at least half of the spaces to be placed side by side (i.e., paired).

6.7.3.3 Sight lines

Wheelchair viewing spaces shall provide lines of sight that are

(a) comparable to those for all viewing positions; and
(b) not reduced or obstructed by standing members of the audience (see Figure 58).

Commentary:

(1) Assembly areas include, but are not limited to, auditoriums, theatres, cinemas, arenas, and stadiums that have seating.
(2) Accent lighting should be provided along the edges of the aisle steps.
(3) Wheelchair viewing spaces may be created by removing fixed seating.
(4) Persons using wheelchairs usually sit higher than persons in standard seating, and care should be taken that wheelchair viewing positions be located so that when occupied, persons who are seated behind them will not have their view obstructed (see Figure 58).

(5) Variety in seating location is necessary to provide choices for people using wheelchairs and to accommodate a companion who may be a wheelchair user or an ambulatory person.

(6) Guard rails protecting wheelchair viewing spaces should not interfere with viewing.

(7) The number of wheelchair viewing spaces should be as listed in Table 6.

Table 6
Number of wheelchair viewing spaces
(See Clause 6.7.3.3.)

Number of seats	Wheelchair viewing spaces
4 to 25	1
26 to 50	2
51 to 150	4
151 to 300	5
301 to 500	6
501 to 5000	6, plus 1 for each 150, or fraction thereof
Over 5000	36, plus 1 for each 200, or faction thereof

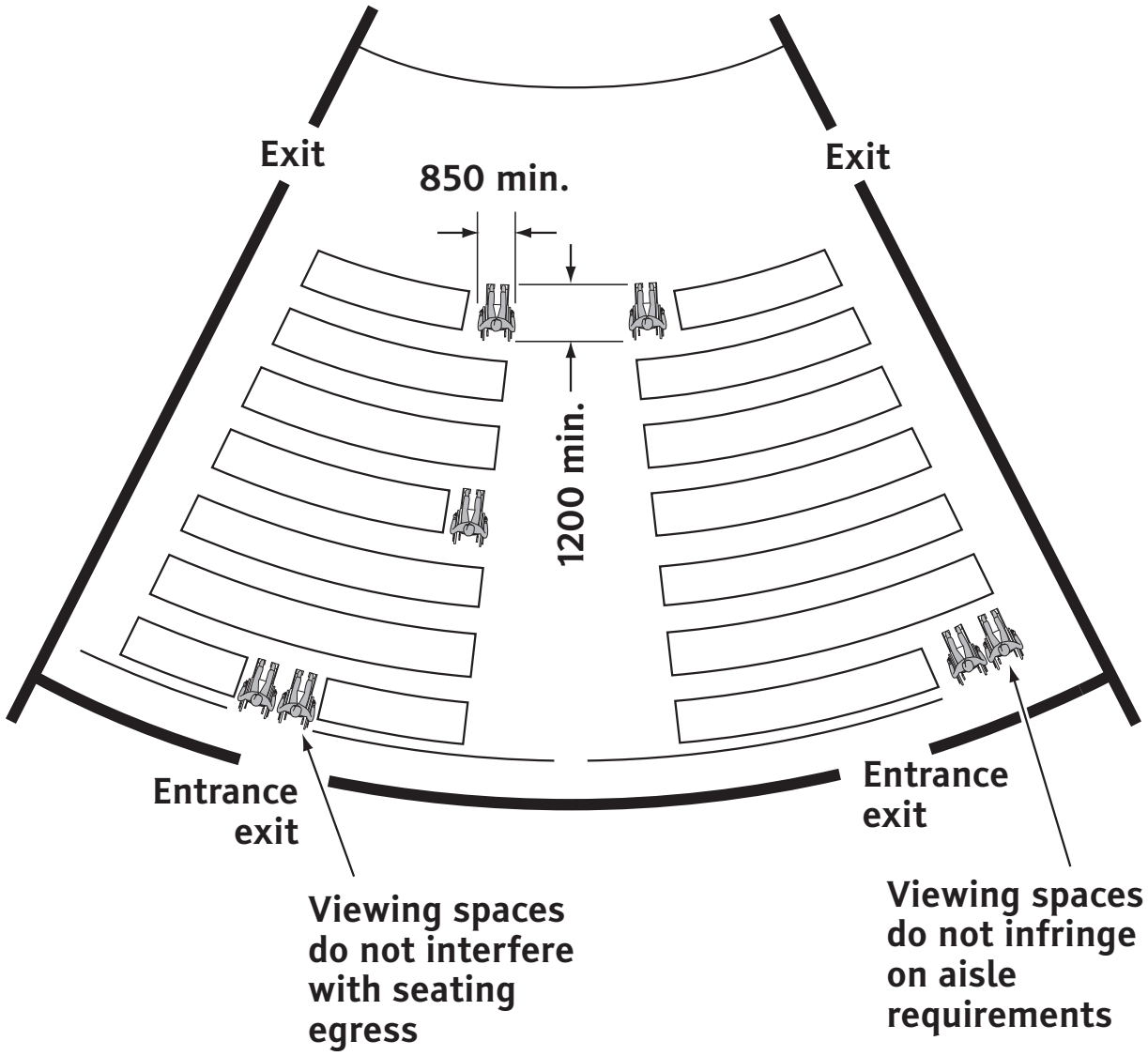

Figure 57
Assembly area viewing spaces
(See Clause 6.7.3.2.)

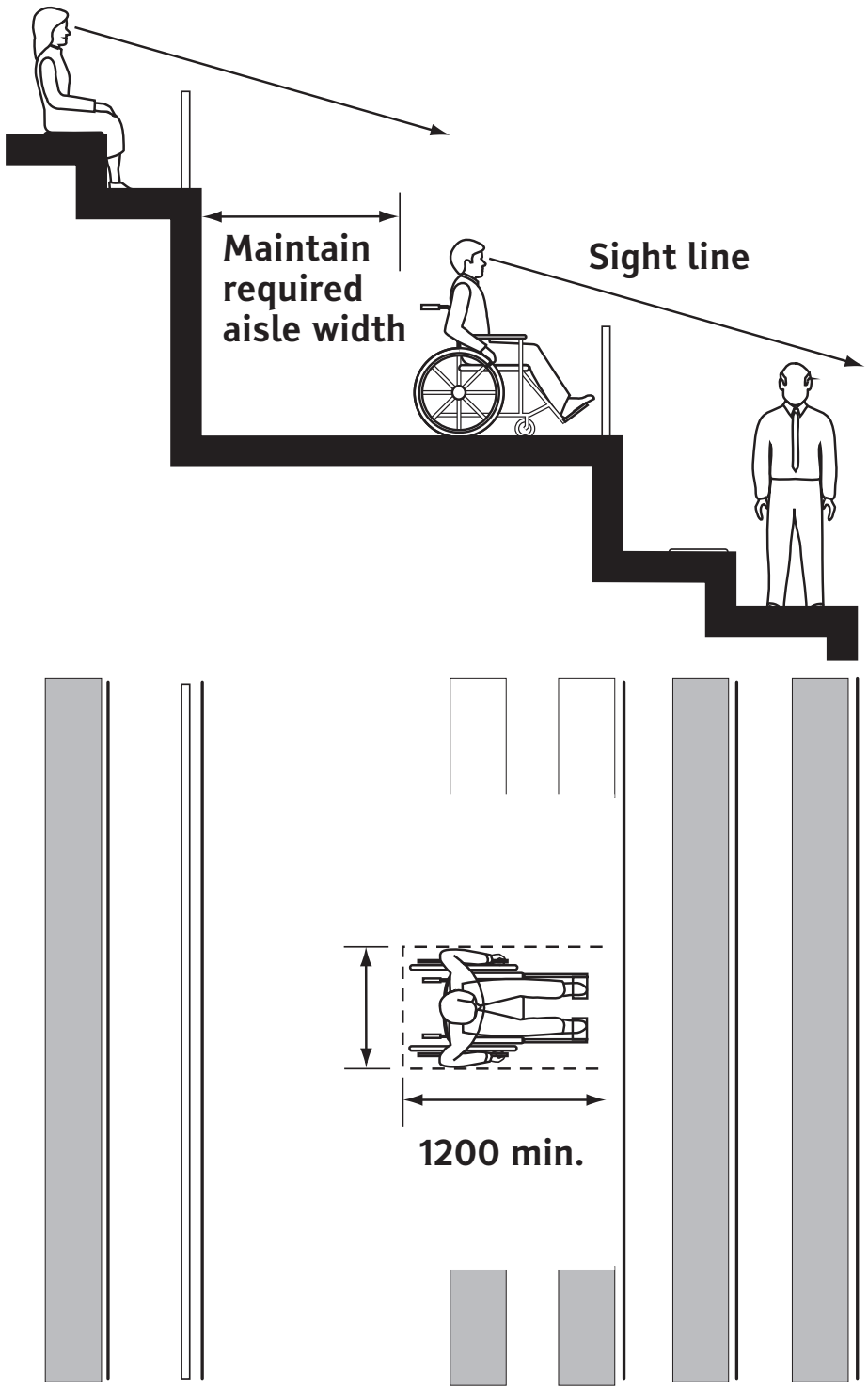

Figure 58
Stadium or arena viewing spaces
(See Clause 6.7.3.3.)

7 Residential accommodation — Permanent and short-term

7.1 Scope

The requirements of this Clause comprise residential accommodation, which includes

(a) permanent (private use) accommodation in a dwelling unit (e.g., house, semi-detached, duplex, row-house, multi-plex, condominium, or apartment) with two possible levels of access, either:
   (i) a visitable dwelling, or
   (ii) an accessible dwelling; and

(b) short-term (public use) accommodation in an accessible bedroom or suite and other common use areas of a hotel/motel, hostel, education residence, or emergency shelter, as well as any other communal residences.

Commentary:

(1) Visitable dwellings offer a basic level of access to accommodate visitors with mobility impairments, elderly persons, or residents who might be temporarily incapacitated.

(2) They allow a person to enter a dwelling safely, to manoeuvre independently throughout the visitable level, and to use the toilet facilities. In visitable dwellings, only the entrance floor level needs to be visitable; therefore, even two and three-storey dwellings can be made visitable on the entrance level, when designed in accordance with Clause 7.3.

(3) Accessible dwellings provide improved usability throughout the entire unit, and accommodate residents and visitors with various disabilities, in accordance with Clause 7.4.

(4) Accessible short-term accommodation enables independent use by persons with various types of disabilities in short-term residential facilities, such as hotels/motels, hostels, education residences, emergency shelters, etc. Accessible bedrooms, suites and other

amenities (e.g., kitchen, laundry) should comply with all the relevant sections of Clause 7.4. All the areas that are accessible to the public and residents should comply with the clauses and requirements of this Standard.

(5) Canada Mortgage and Housing Corporation has published extensive guidelines and research studies on accessible and visitable housing, which are referenced in Annex D.

7.2 Design requirements

7.2.1 Common use spaces

In multi-unit residential accommodation, all common use spaces and services shall comply with the applicable sections of Clauses 4, 5, 6, 8, and 9.

7.2.2 Dwelling units

Whether for permanent or short-term accommodation, a dwelling unit shall comply with either

(a) Clause 7.3 for a visitable level of accommodation; or
(b) Clause 7.4 for an accessible level of accommodation.

7.3 Visitable dwelling units

7.3.1 Exterior circulation

7.3.1.1 Exterior route

An exterior route to a visitable unit entrance shall have

(a) a width of at least 920 mm;
(b) a stable, firm, and slip-resistant surface;
(c) a running slope not steeper than in a ratio of 1:20 (5%), unless designed as a ramp;
(d) a cross slope not greater than in a ratio of 1:50 (2%); and
(e) the side edges either
    (i) have no drop-off, or a slope leading from it not steeper than 1:20; or
    (ii) comply with Clause 5.5.6 where there is a drop-off or a slope steeper than 1:20.

Commentary:

(1) The entry into a visitable dwelling unit should be the main entrance to the unit.

(2) Where this is not possible, an alternative entrance may be used as the visitable entrance, including an entrance from an attached garage, an entrance along the side of a dwelling unit, or one from the rear.

7.3.1.2 Entrance landing

From the accessible route, the visitable entrance landing shall have a level area at least 1500 × 1500 mm.

Commentary:

At the visitable entrance, a larger landing, at least 2250 × 2250 mm, should be provided in order to accommodate larger mobility aids.

7.3.2 Entrance door

The visitable entrance door shall have

(a) no step at the door;

(b) a clear opening that complies with Clause 5.2.1; and

(c) a threshold that complies with Clause 5.2.6.

7.3.3 Interior circulation

7.3.3.1 Corridors

On the visitable floor, corridors shall

(a) be at least 920 mm wide; and

(b) have no level changes requiring steps.

7.3.3.2 Doors

On the visitable floor, doorways shall have

(a) a clear opening that complies with Clause 5.2.1; and

(b) a threshold that complies with Clause 5.2.6.

7.3.4 Washroom

On the visitable floor, a washroom shall be provided with

(a) a door that swings outward or is sliding; and

(b) a clear route to the toilet at least 920 mm wide.

Commentary:

On a visitable floor, a washroom that contains only a lavatory and toilet is acceptable, although a full bathroom is preferable.

7.4 Accessible dwelling units

7.4.1 Circulation

7.4.1.1 Parking

Interior, exterior, or covered parking spaces shall have

(a) pedestrian routes that comply with Clause 9.2;

(b) signage that complies with Clause 9.4; and

(c) designated parking spaces that comply with Clause 9.5.

Commentary:

(1) Covered parking spaces should be provided, since they offer protection against adverse weather and eliminate the need to clear snow and ice.

(2) Accessible signage is not required for single-family homes.

(3) An automated power garage door opener allows for operating the garage door without exiting the vehicle.

(4) Where entry to a secured parking area involves the use of an intercom, it should comply with Clause 7.4.1.5.4.

7.4.1.2 Passenger pick-up areas

Where provided, a passenger pick-up area shall comply with Clause 9.3.

7.4.1.3 Exterior route

An exterior route shall

(a) comply with Clauses 4.3.2 and 7.3.1.1; and

(b) have a clear width of at least 1200 mm.

7.4.1.4 Changes in level

7.4.1.4.1 Ramps

Where there is a change in level having a slope greater than a ratio of 1:20 (5%), it shall be designed as a ramp that complies with either

(a) Clause 8.2.7 for an exterior ramp; or
(b) Clause 5.5 for an interior ramp.

Commentary:

(1) The site design should avoid changes in level between the main entrance and the exterior circulation route, parking, or passenger pick-up area.
(2) Where changes in level are unavoidable, the area should be graded and designed to provide a gradual slope so as not to exceed a ratio 1:20 (5%) over an extended distance. Vertical level changes requiring slopes greater than 1:20 (5%) will need to be designed as a ramp.
(3) When faced with a high vertical rise or where sufficient space is not available for the required ramp length, an elevating device (e.g., a platform lift) should be used.
(4) Alternatively, an entrance may be designed to allow people to enter at grade level, and then use an indoor elevator or lift (e.g., vertical platform lift, inclined platform lift, etc.) to travel between floors of the dwelling unit.

7.4.1.4.2 Stairs

Stairs shall comply with either

(a) Clause 8.2.8 for exterior stairs; or
(b) Clause 5.4 for interior stairs.

7.4.1.4.3 Elevating devices

Where an elevating device is used to overcome a change in level, it shall comply with either

(a) Appendix E of ASME A17.1/CSA-B44 for elevators and service lifts;
(b) CAN/CSA-B613 for platform lifts within a dwelling; or

(c) CAN/CSA -B335 for an elevating device whose change in level is not more than
   (i) 7000 mm for an enclosed runway; or
   (ii) 2500 mm for an unenclosed runway.

Commentary:

(1) Within multi-level dwellings, the number of levels that can be served by an elevating device depends on the device used as well as the dwelling layout.

(2) Elevators and vertical or inclined platform lifts are usable by all persons, including users with a walker, wheelchair, or scooter (depending on size).
Stair-mounted chair lifts only accommodate persons who can sit on the chair.

(3) Most inclined platform or chair lifts can be folded against the wall when not in use, to maximize the clear stair width. Such lifts are easier and cheaper to install on a straight flight of stairs than on one that curves or turns a corner.

(4) Depending on the device, consideration should be given to issues relating to required stair width, fire safety, headroom clearance, clear floor area for entering/exiting the device, safety features, power/drive mechanisms, and operating controls.

7.4.1.5 Entrances and doors

Δ 7.4.1.5.1 Entrance landings

An entrance landing shall
(a) comply with Clause 7.3.1.2; and
(b) be illuminated to a level of at least 50 lx.

Commentary:

A covered entrance offers protection against adverse weather conditions.

7.4.1.5.2 Entrance doors

An entrance door shall

(a) comply with Clause 7.3.2;
(b) have a manoeuvring area that complies with Clause 5.2.2;
(c) have a threshold that complies with Clause 5.2.6;
(d) have door hardware that complies with Clause 5.2.7; and
(e) have a door-opening force that complies with Clause 5.2.8.

Commentary:

To ease entry, a power-assisted door should be provided.

A package shelf at the door offers a setting to place belongings while opening the door.

7.4.1.5.3 Signage

All identification and numbers shall comply with Clauses 4.5.1 to 4.5.5.

Commentary:

On multi-unit dwellings or public short-term residences, properly placed exterior and interior signage is required to assist with wayfinding and orientation.

7.4.1.5.4 Door bells or intercoms

A door bell or intercom system shall

(a) comply with Clause 4.2;
(b) where connected to a security release door opener, have a visual and audible signal at the entrance to indicate a "go ahead"; and
(c) be connected to a communication system within the unit.

Commentary:

(1) Connecting the intercom system to the unit telephone system enables the occupant to access the intercom from any telephone. In addition, persons who require adaptations for volume control, manipulation of buttons or receivers, or a visual "ringing" system already have these on their telephones.

(2) An intercom system may include a TTY or a closed circuit television.

7.4.1.5.5 Door viewers

Where a door viewer is installed, a second one shall be located at a height between 1000 and 1200 mm from the floor.

7.4.2 Interior circulation

7.4.2.1 Corridors

A corridor shall

(a) have a clear width of at least 920 mm;
(b) have no steps or changes in level; and
(c) comply with Clauses 4.3.1, 4.3.2, and 4.3.3.

7.4.2.2 Doors and doorways

Doors shall

(a) comply with Clause 5.2; and
(b) for washroom/bathroom, roll-in closet and general storage, swing outward or be sliding.

7.4.2.3 Floor surfaces

A floor surface shall comply with Clause 4.3.1.

7.4.3 Bathrooms

7.4.3.1 Lavatory

A lavatory shall comply with Clause 6.2.3.

7.4.3.2 Medicine cabinets

A medicine cabinet shall

(a) be adjacent to a clear floor area of at least 750 × 1200 mm (which may include the knee clearance at the lavatory);
(b) be located within a horizontal reach of not more than 500 mm;
(c) have the bottom shelf located not more than 1000 mm from the floor;
(d) have doors and hardware that comply with Clause 4.2.3 ; and
(e) be illuminated to a level of at least 200 lx.

7.4.3.3 Storage

A bathroom storage shelf shall be located not more than 1100 mm from the floor.

Commentary:

Shelving should not constitute a protrusion hazard, as described in Clause 4.4.

7.4.3.4 Towel bar

A towel bar shall

(a) be installed not more than 1100 mm from the floor; and

(b) have a clear floor area of 750 × 1200 mm located within a horizontal reach of not more than 500 mm.

7.4.3.5 Mirror

A mirror shall comply with Clause 6.2.4.2.

7.4.3.6 Toilet

A toilet shall comply with Clauses 6.2.6.1, 6.2.6.2, and 6.2.6.3.

Commentary:

For occupants who might require a higher toilet seat, seat height adaptors are available.

7.4.3.7 Structural support for grab bars

Structural support areas in the walls around the toilet shall be

(a) capable of supporting grab bars to resist a force of at least 1.3 kN applied in any direction;

(b) located in the back wall
   - (i) continuous between at least 700 and 900 mm from the floor; and
   - (ii) from the corner out to at least 800 mm; and

(c) located in the side wall
   - (i) continuous between at least 700 and 1500 mm from the floor; and
   - (ii) from the corner out to at least 1250 mm (see Figure 59).

Commentary:

(1) Grab bars should be installed to respond to the specific needs of the residents after they have moved into the unit.

(2) A structural support area in the walls is required so that grab bars can be installed to respond to the individual needs of the occupants. Providing structural support for the full height of the corner walls around the toilet allows for maximum flexibility in locating grab bars and other equipment.

(3) Some persons might prefer grab bars on the left or on the right side of the toilet, which may be accomplished by reversing the layout of the toilet.

(4) If grab bars are to be pre-installed, they should comply with Clauses 6.2.5 and 6.2.6.4.

(5) Flip-down grab bars may also be used if they comply with Clause 6.2.5.

7.4.3.8 Toilet paper dispenser

A toilet paper dispenser shall comply with Clause 6.2.6.5.

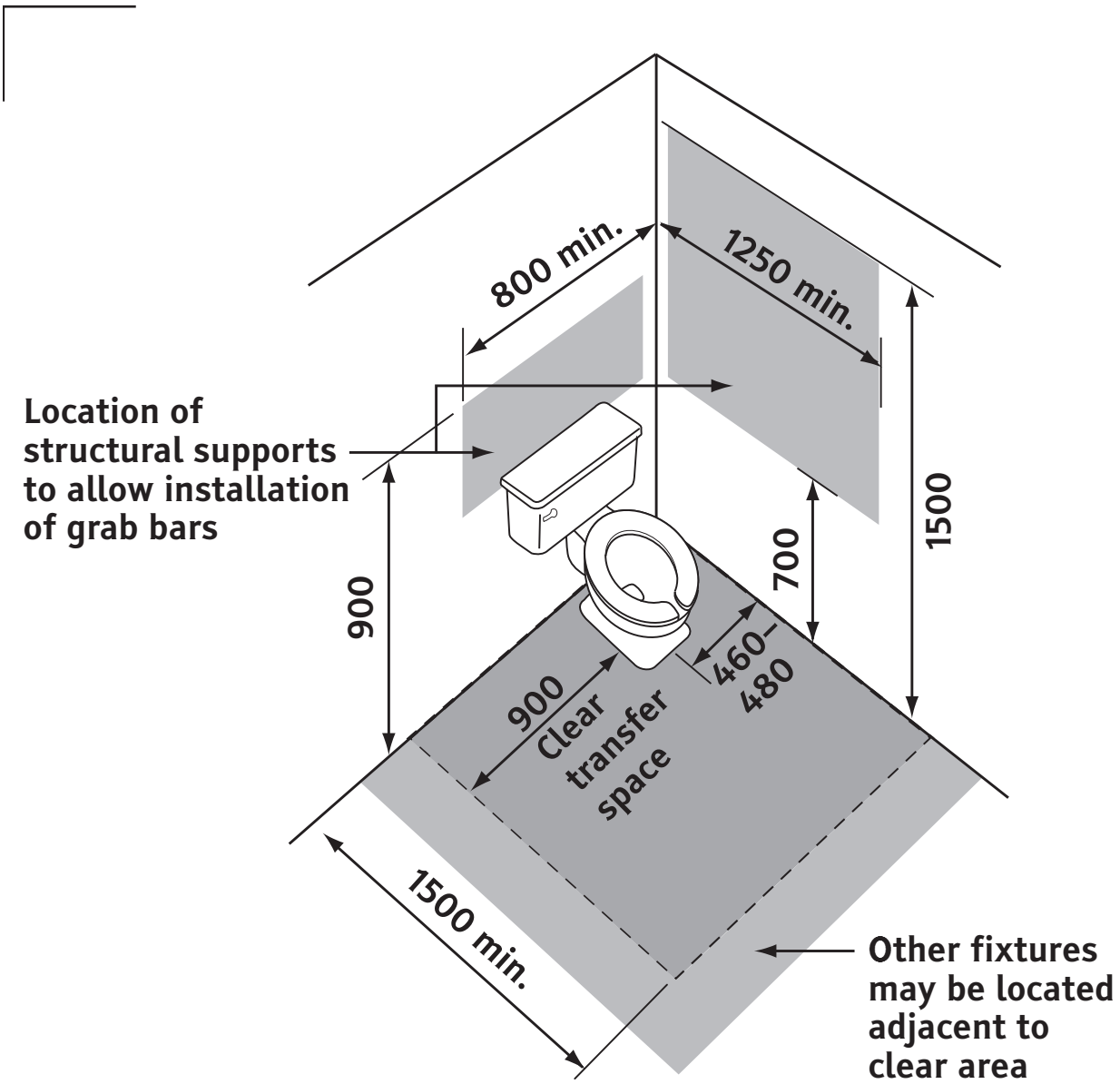

Figure 59
Toilet access area and structural support in walls
(See Clauses 7.4.3.6 and 7.4.3.7.)

7.4.3.9 Bathtub

7.4.3.9.1 General

A bathtub shall have

(a) a length of at least 1500 mm;

(b) a clear floor area at least 750 mm wide along the full length of its open side;
(c) faucets and other controls that comply with Clause 6.5.7.3 ;
(d) a showerhead that complies with Clause 6.5.2;
(e) water temperature that complies with Clause 6.5.1; and
(f) no sliding door to enclose it.

7.4.3.9.2 Structural support for grab bars

Structural support areas in the walls around the bathtub shall be
(a) capable of supporting grab bars to resist a force of at least 1.3 kN applied in any direction; and
(b) continuous around the three walls surrounding the bathtub, from the bathtub rim to the underside of the ceiling.

Commentary:

(1) Grab bars should be installed to respond to the specific needs of the residents after they have moved into the unit.
(2) A structural support area in the walls is required so that grab bars can be installed to respond to the individual needs of the occupants. Providing structural support for the full height of the three walls above the bathtub allows for maximum flexibility in locating grab bars and other equipment.
(3) If pre-installation of grab bars is necessary, it should comply with Clauses 6.2.5 and 6.5.7.2.

7.4.3.10 Shower stall

Δ 7.4.3.10.1 General

With the exception of grab bar installation, a shower stall shall comply with Clauses 6.5.1 to 6.5.5.

Δ 7.4.3.10.2 Structural support for grab bars

Structural support areas in the walls around the shower stall shall be

(a) capable of supporting grab bars to resist a force of at least 1.3 kN applied in any direction; and

(b) continuous around the walls surrounding the shower stall, between at least 700 and 1500 mm from the floor.

Commentary:

(1) Grab bars should be installed to respond to the specific needs of the residents after they have moved into the unit.

(2) A structural support area in the walls is required so that grab bars can be installed to respond to the individual needs of the occupants. Providing structural support for the full height of the three walls around the shower stall allows for maximum flexibility in locating grab bars and other equipment.

(3) If pre-installation of grab bars is necessary, it should comply with Clause 6.5.5.3.

7.4.4 Kitchens

7.4.4.1 Floor area

A clear floor area of at least 750 × 1200 mm shall be provided

(a) directly in front of kitchen fixtures; and

(b) to the one side where drawers or doors open (see Figure 60).

Commentary:

There should be a clear floor area of 1500 × 1500 mm between fixtures (e.g., cabinets, appliances, etc.) to provide the necessary space for mobility aid users to access the fixtures easily.

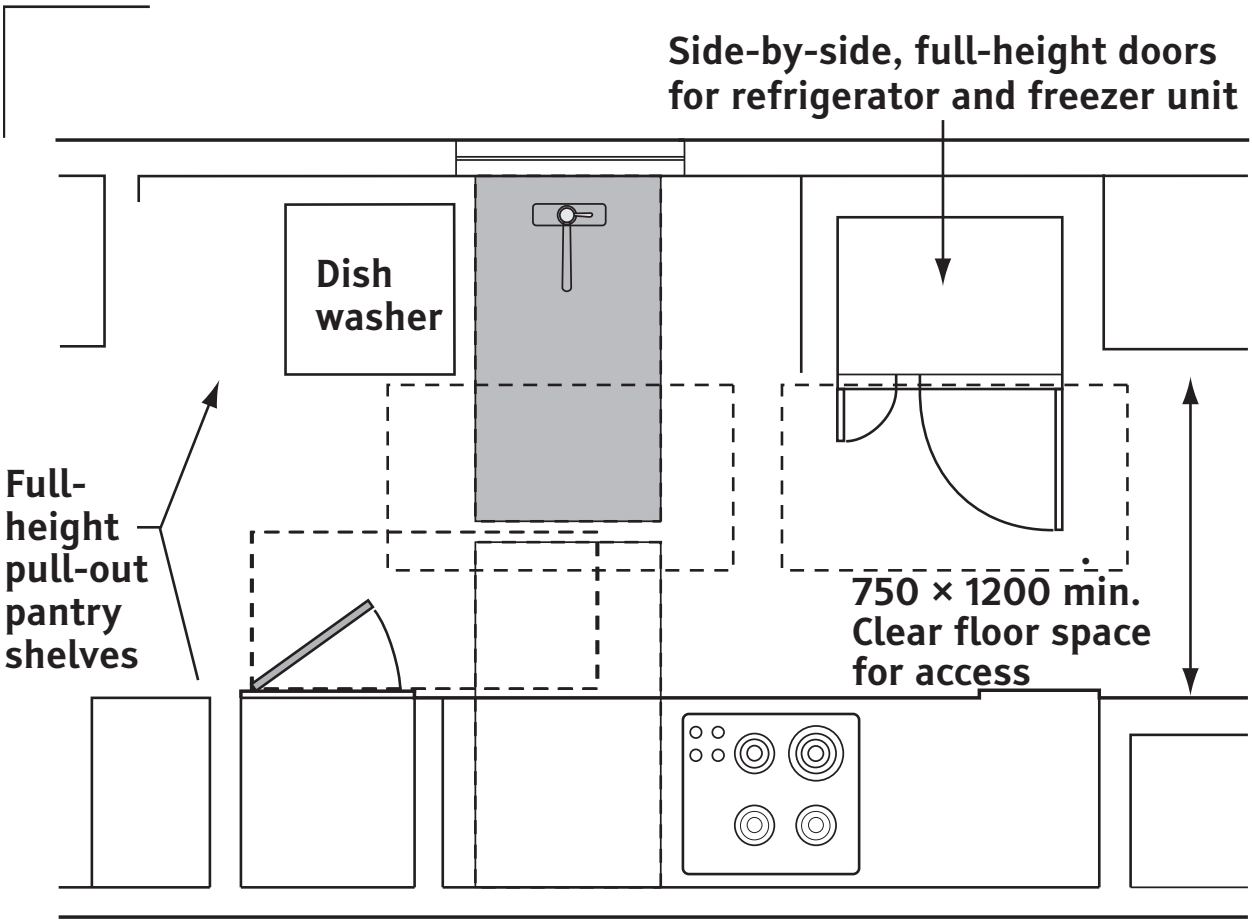

Figure 60
Plan of parallel kitchen
(See Clause 7.4.4.1.)

7.4.4.2 Counters

At least one counter shall

(a) be at least 750 mm wide × 600 mm deep;
(b) be at a height between 730 and 860 mm;
(c) have a clear floor area of at least 750 × 1200 mm, which may extend up to 480 mm underneath the work surface;
(d) have a centred knee clearance at least 750 mm wide × 480 mm deep × 680 mm high (see Figures 61 and 62);
(e) have no sharp or abrasive surfaces under it; and
(f) have electrical outlets at the side or the front of it.

Commentary:

(1) An additional pull-out workboard below the standard countertop level should be available.
(2) Countertops linking the kitchen appliances should be continuous.
(3) A colour-contrasted front edge on the counters helps define the user space.

7.4.4.3 Base cabinets

Base cabinets shall have a toe space at least 150 mm deep × 230 mm high.

7.4.4.4 Sinks

A sink shall

(a) be located with the centreline at least 460 mm from a side wall;
(b) have the rim height located between 810 and 860 mm from the floor;
(c) have a knee clearance centred on the sink at least 750 mm wide × 200 mm deep × 680 mm high, with an additional toe space at least 750 mm wide × 230 mm deep × 230 mm high;
(d) have a clear floor area at least 750 × 1200 mm, which may extend up to 480 mm underneath the sink;
(e) have faucets that are either
    (i) handles of the lever type that are operable with a closed fist; or
    (ii) automatically activated;
(f) have no sharp or abrasive surfaces under it; and
(g) have hot water and drain pipes offset to the rear and not abut the clear space (see Figure 61).

Commentary:

If hot water and drain pipes abut the clearances noted in Item (g), they should be insulated [see Figure 40(c)].

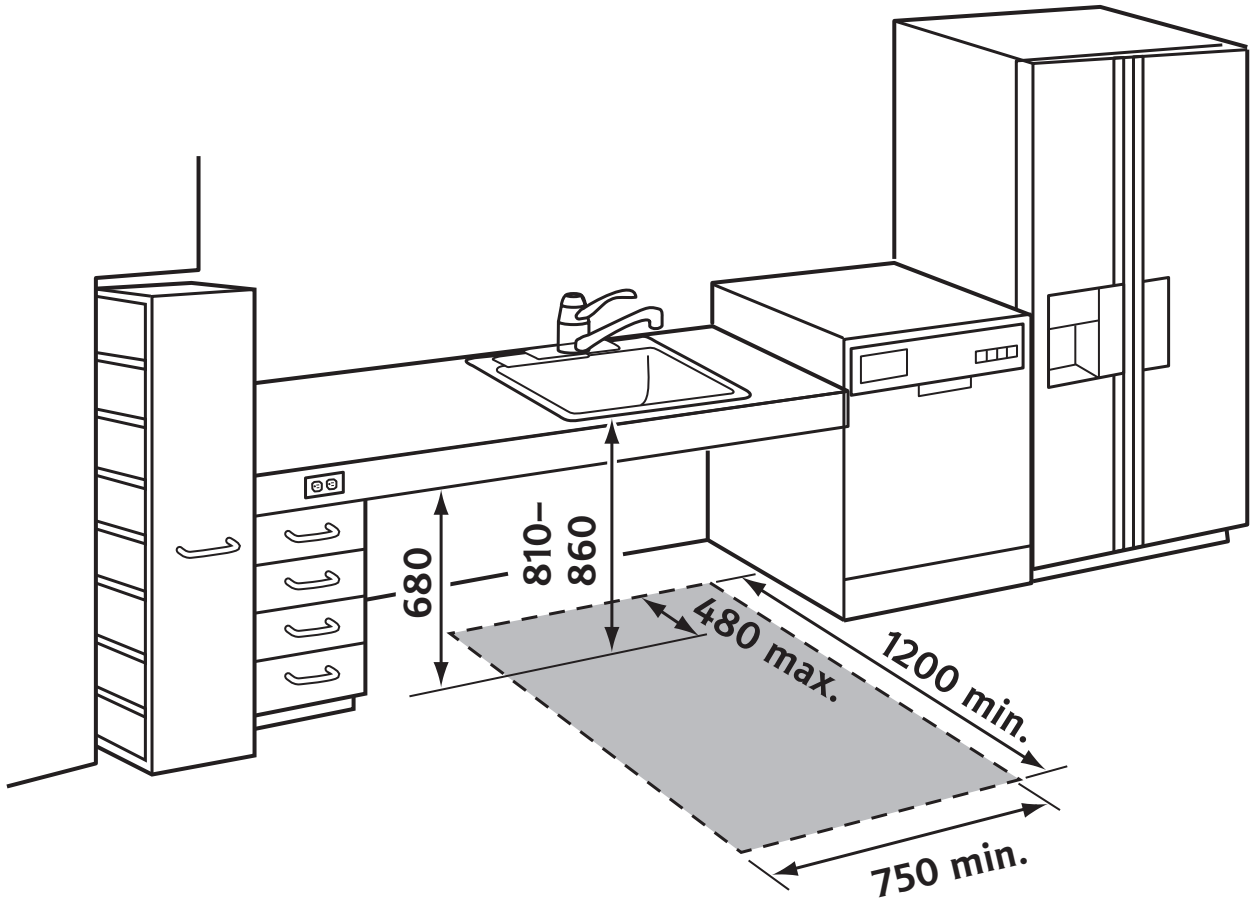

Figure 61
Work surface and sink
(See Clauses 7.4.4.2, 7.4.4.4, and 7.4.4.8.)

7.4.4.5 Illumination

Kitchen illumination levels shall

(a) be 300 lux for countertops or work surfaces; and

(b) have operating controls that comply with Clause 4.2.7.

Commentary:

Natural light, task lighting, and dimmer switches improve and add to conventional illumination.

7.4.4.6 Cooktops

A cooktop shall have

(a) controls that
  (i) are located such that they do not require reaching across the heating surface to operate; and
  (ii) comply with Clause 4.2;

(b) a surface height located between 810 and 860 mm from the floor;

(c) an adjacent work surface at least 400 mm wide at the same height as the cooktop;

(d) a knee clearance centred on the cooktop at least 750 mm wide × 200 mm deep × 680 mm high, with an additional toe clearance at least 750 mm wide × 230 mm deep × 230 mm high;

(e) insulation or other protection on the underside where the knee clearance is provided; and

(f) a clear floor area at least 750 × 1200 mm, which may extend up to 480 mm underneath the cooktop (see Figure 62).

Commentary:

Cooktops with flat ceramic surfaces should not be used for people with low vision.

7.4.4.7 Ovens

7.4.4.7.1 Controls

A wall oven shall have controls

(a) located on the front panel; and

(b) that comply with Clause 4.2.

Commentary:

(1) Wall ovens with side-opening door should be used. Self-cleaning ovens should be used.

(2) Microwave ovens should be mounted at counter height.

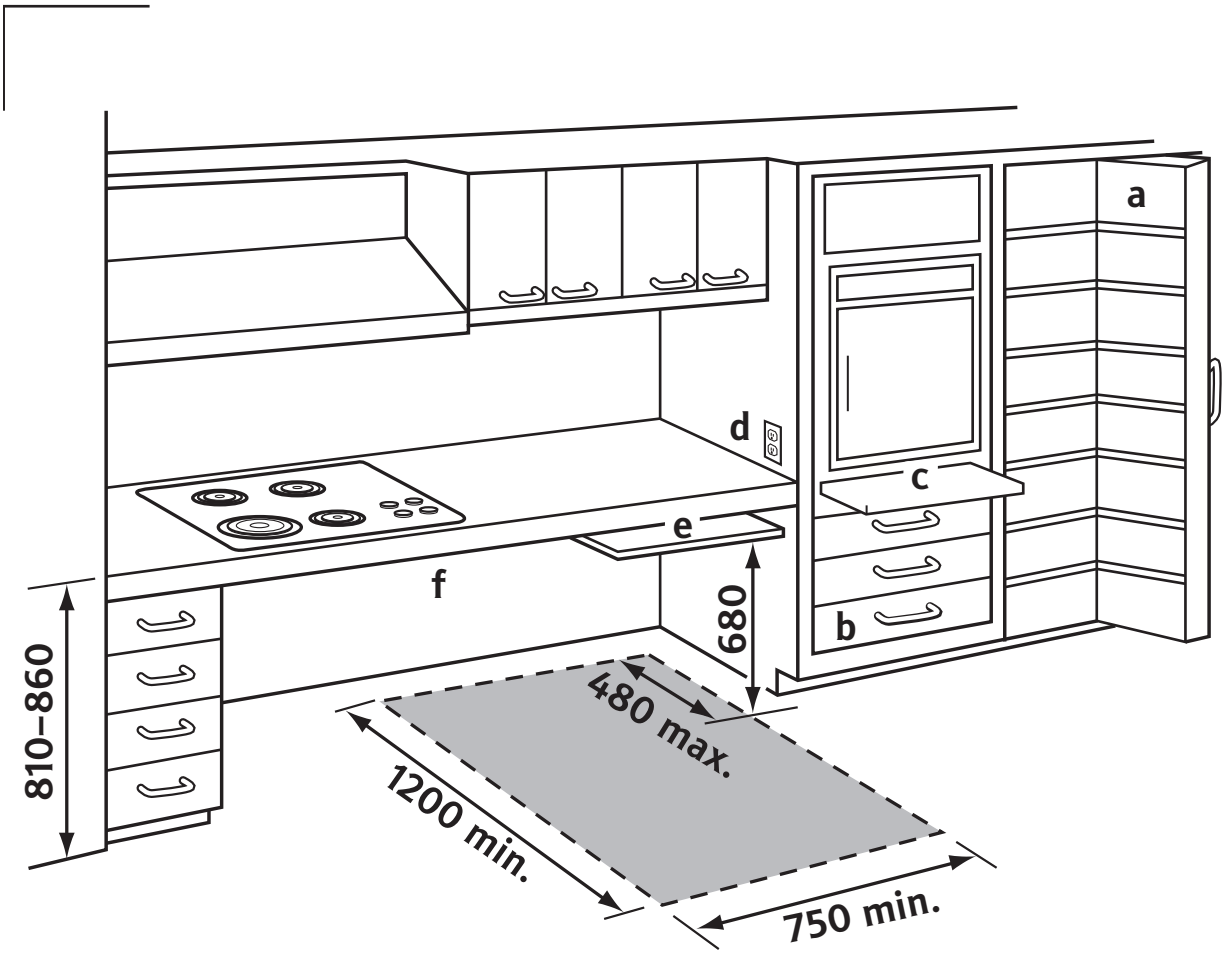

Legend:
a = Full height pantry with shelves on swing out door
b = "D"-type pulls on cupboards and drawers
c = Pull-out shelf under wall oven
d = Electronic outlets accessible from seated position
e = Pull-out workboard for easy access and use
f = Knee space under countertop cooking unit

Figure 62
Cooking unit, oven, and pantry storage
(See Clauses 7.4.4.2, 7.4.4.6, and 7.4.4.7.2.)

7.4.4.7.2 Heat-resistant shelf

At a side-opening oven, a horizontal, heat-resistant shelf shall be provided either

(a) beside the latch edge of the oven door; or
(b) in the form of a pull-out shelf under the oven door that
    (i) extends the width of the oven; and
    (ii) pulls out at least 250 mm (see Figure 62).

7.4.4.8 Refrigerators

A refrigerator shall

(a) have a self-defrosting freezer;
(b) be an over-and-under type, with the freezer shelf space not more than 1100 mm from the floor; or
(c) be a vertical side-by-side type (see Figure 61).

Commentary:

(1) Side-by-side refrigerators are generally more accessible, but they are wider and can be taller.
(2) For the over-and-under models, the freezer should be at the bottom.
(3) Roll-out shelves or drawers improve access to the refrigerator contents.
(4) Through-the-door ice and water dispensers are convenient for many users.

7.4.4.9 Kitchen storage

Cabinets, drawers, and shelves shall have

(a) at least one shelf not more than 1100 mm from the floor (where it is above a work surface); and
(b) "D"-type door pulls mounted close to the
    (i) bottom of upper cabinet doors; and
    (ii) top of base cabinet doors.

Commentary:

(1) For kitchen storage, shelving should be provided above the counter and drawers or pull-out shelves below the counter.

(2) Full-height storage cabinets provide a good range of accessible storage, which is particularly useful because, in accessible kitchens, the amount of base storage is reduced by the knee clearance provisions.

(3) Full-extension drawers and shelves provide storage space that is easy to reach and use.

(4) "Lazy Susan" trays also provide accessible storage.

7.4.5 Bedrooms

A bedroom shall have a clear floor area of at least 750 × 1200 mm on at least two sides of the bed.

7.4.6 General features of dwellings

7.4.6.1 Emergency and security alarms

An alarm shall

(a) include both audible and visual signals; and

(b) comply with Clause 5.7.1.

7.4.6.2 Windows

Windows shall

(a) where intended for viewing, except where located above a counter, have a sill no higher than 750 mm from the floor; and

(b) where operable for ventilation, have an opening and locking mechanisms that comply with Clause 4.2.

7.4.6.3 Operating controls

Operating controls, such as electrical switches and outlets, thermostats, communication systems, breaker boxes, exhaust fans, water shut-off valves, etc., shall comply with Clause 4.2.

7.4.6.4 Clothes closets

A clothes closet shall have

(a) a clear floor area of at least 750 × 1200 mm in front of it;
(b) a clothes rail not higher than between 1200 and 1400 mm from the floor; and
(c) where shelves are provided, at least three shelves between 400 and 1200 mm from the floor (see Figure 63).

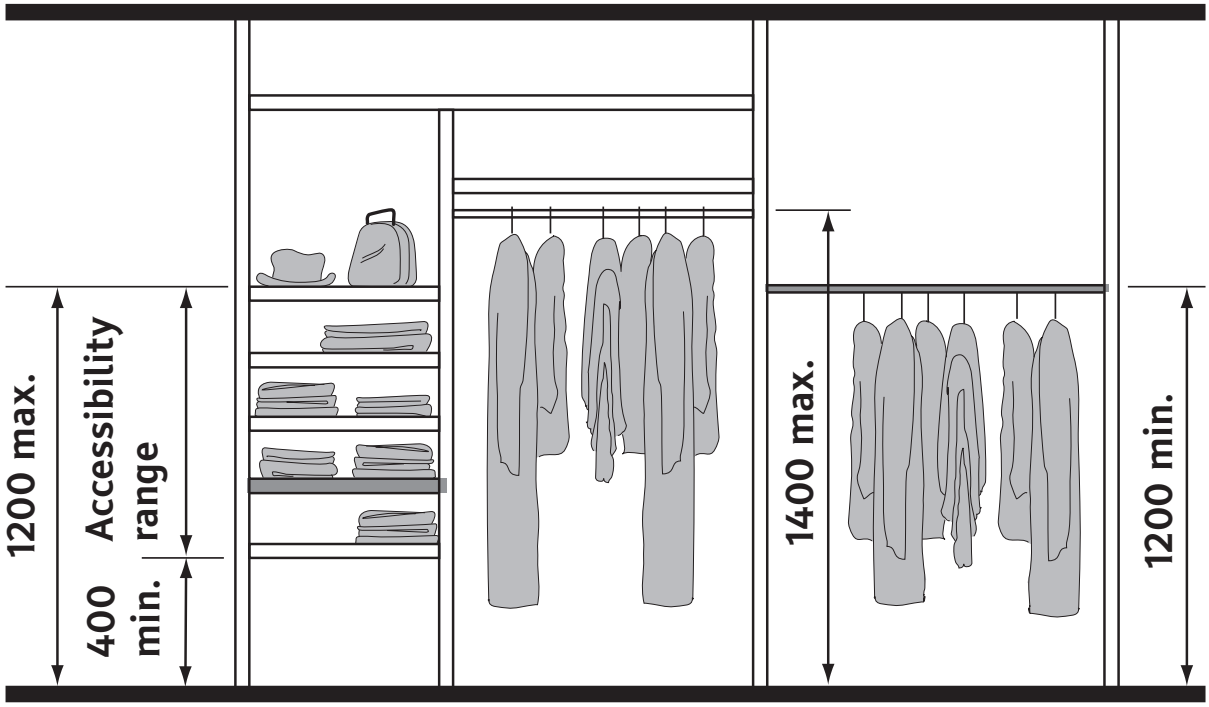

Figure 63
Clothes closets
(See Clause 7.4.6.4.)

Δ 7.4.6.5 General storage

A general storage space shall

(a) have a door that swings outward;
(b) have an electric outlet on the inside, close to the door; and
(c) be capable of being illuminated to a level of at least 50 lx.

Commentary:

Sufficient storage space should be provided for aids such as shower chairs, walkers, transfer benches, commode chairs, and wheelchairs (see Annex B for typical dimensions).

7.4.6.6 Miscellaneous services

Services such as laundry facilities, post boxes, garbage disposals, or hose bibs shall

(a) be on an accessible route;
(b) have a clear floor area at least 750 × 1200 mm in front of each service; and
(c) have controls and operating mechanisms that comply with Clause 4.2.

Commentary:

(1) In single-family units, laundry facilities should be located on the same floor as the bedrooms and bathrooms.
(2) Front-loading laundry machines should be used.

Δ 7.4.7 Outdoor living areas

An outdoor living area such as a patio, balcony, or deck shall

(a) be adjacent to an accessible route;
(b) have a surface that complies with Clause 4.3;
(c) be at least 1500 × 1500 mm in area;
(d) have a manoeuvring area at the door that complies with Clause 5.2.2;
(e) have a no step, level threshold through patio doors or openings onto a patio, deck, or balcony; and
(f) be capable of being illuminated to a level of at least 50 lx at the floor level.

Commentary:

Appropriate drainage should be provided at the door.

8 Exterior circulation, spaces, and amenities

8.1 Scope

The requirements of this Clause deal with exterior pedestrian locations, on public or private property, that include circulation routes, spaces, and amenities that are part of

(a) public areas such as rights-of-way, parks, plazas, recreation facilities, etc.; and

(b) private areas such as outdoor restaurants, theatres, and the grounds of residential, commercial, educational, club, and other complexes.

8.2 Accessible routes

8.2.1 General

An accessible exterior pedestrian route shall

(a) comply with Clauses 4.3.1, 4.3.2, 4.3.4, and 4.4;

(b) where adjacent to a vehicular route, be separated from it by
   (i) a curb with a curb ramp;
   (ii) a railing or other barrier; or
   (iii) a tactile attention indicator surface complying with Clause 4.3.5.3;

(c) where bollards are used to prevent vehicles from entering the pedestrian route, have them comply with Clause 8.3.9; and

(d) in high pedestrian traffic areas (see Clause 8.5.2), be delineated on both sides by texture- and colour-contrasted surfaces at least 300 mm wide.

Commentary:

(1) Exterior pedestrian routes should have a firm surface, such as asphalt, concrete, pavers, or lumber (with planks across the direction of travel). Irregular surfaces, such as cobble stones and exposed aggregate paving, are difficult to traverse.

(2) Pedestrian routes should have adequate drainage to avoid water accumulation.

(3) Buildings or facilities within a complex (including those located within a parking lot) should be connected to the accessible public pedestrian route by an accessible route.
(4) The contrasting surface adjacent to the accessible route may be accomplished by landscaping features such as grass or alternative textured material.
(5) Awnings, overhead canopies, guy wires or vegetation (e.g., tree branches) should not obstruct any part of the accessible route.
(6) Protrusions from buildings, such as gas meters, stand pipes, etc. should be cane detectable and colour-contrasted from their surroundings.
(7) Accessible routes and spaces should be appropriately maintained, since some paving materials can settle or heave in time, which can become a significant pedestrian barrier or hazard.
(8) Since snow accumulation becomes a barrier on accessible routes and spaces, it should be cleared off at the earliest possible time. Snow clearing operations should not leave snow banks at or near corners, curb ramps, transit stops, or other critical locations.

8.2.2 Width

The clear width of an accessible pedestrian route shall be
(a) at least 1500 mm; or
(b) where adjacent to a curb ramp, at least 1200 mm (see Figure 64).

Commentary:

(1) Since persons with a vision impairment rely on straight paths for their way-finding needs, accessible paths should be designed to be as straight as possible. Paths that wander or zig-zag should be avoided.
(2) In high traffic areas, an accessible path should be at least 2000 mm wide.

8.2.3 Slope

The running and cross slopes of an accessible pedestrian route shall comply with Clause 5.1.2.

8.2.4 Drainage

A pedestrian route shall

(a) be well drained to prevent the accumulation of ice and water; and

(b) not allow water from building down-spouts or other drainage systems to flow across it.

8.2.5 Edge protection

An edge protection at least 75 mm high shall be provided where a drop-off between 75 and 250 mm deep is immediately adjacent to a pedestrian route. This requirement does not apply to a standard curb of 150 mm or less.

Commentary:

(1) Edge protection along a pedestrian route should be incorporated for areas with any drop-off immediately adjacent to the walkway.

(2) The edge protection may be accomplished by several means: a concrete lip, raised landscape edging, or similar.

(3) A guard system should be located adjacent to routes where the drop-off is greater than 250 mm.

8.2.6 Shared-use routes

An accessible route that is shared with other users, such as cyclists, in-line skaters, etc., shall

(a) be delineated or separated from these activities by bollards or other physical means; and

(b) designate the separate routes by signage (on grade and on posts) that complies with Clause 4.5.

8.2.7 Exterior ramps

An exterior ramp shall

(a) have a running slope and length that complies with Clause 5.5.1;
(b) have a cross slope that complies with Clause 5.5.2;
(c) be at least 1200 mm wide;
(d) have level landings that
  (i) comply with Clause 5.5.4; and
  (ii) are designed to drain water from their surface (but not exceed the specified cross slope);
(e) have the sloped and level surfaces comply with Clauses 4.3.1 and 4.3.4;
(f) provide edge protection at the ramp sections and landings that comply with Clause 5.5.6; and
(g) where the vertical rise is more than 250 mm, have handrails that comply with Clause 5.5.8 (see Figure 32).

Commentary:

(1) A ramp is a sloping walkway leading from one level to another. The running slope of the ramp is the ratio of the change in level (vertical rise) to its horizontal length (run) (see Figure 31). The more gradual the slope of the ramp (i.e., the less steep it is) the easier it is to use without assistance.
(2) Therefore, slopes should have a ratio between 1:20 (5%) and 1:15 (6.7%).
(3) Exterior landings should be 2250 mm long, so as to accommodate larger wheeled mobility aids.
(4) Adverse weather can cause slippery conditions on exterior ramps. To avoid this situation, several options are available: a porous material to lessen the build-up of snow and ice, a heated ramp surface, or a covered ramp.
(5) An edge protection that is open at the surface level facilitates snow removal and lessens water accumulation [see Figures 33(b) and (c)].
(6) Many people find using steps easier and safer than a ramp. Therefore, both stairs and a ramp should be provided in any one location.

(7) Ramps that surmount a major change in level (vertical rise) have to be very long and require multiple ramp and landing combinations. In such circumstances, other design solutions should be considered.
(8) Curved ramps should not be used as a design solution.

8.2.8 Exterior stairs

Exterior stairs shall
(a) comply with Clause 5.4;
(b) where the distance between the handrails is greater than 2200 mm, have an intermediate handrail that is located between 920 mm and 1000 mm from one of the handrails; and
(c) be designed to avoid water accumulation.

Commentary:

Though all stairs require at least two handrails, on wide stairs one or more additional handrails are needed so that users have easy access to two adjacent handrails for safety.

Δ 8.2.9 Illumination for pedestrian routes

Illumination along a pedestrian route shall
(a) be continuous and not create any dark or shadow areas;
(b) have lighting standards located off the pedestrian route or space, but adjacent to it; and
(c) illuminate components along a pedestrian route, such as stairs, ramps, or rest areas, to at least 50 lx at ground level.

Commentary:

Lighting can be used as a wayfinding element to delineate the pedestrian route, as well as to emphasize building features, such as entrances, stairs, ramps, or signage.

8.3 Pedestrian crossings

8.3.1 General

A pedestrian crossing traversing a vehicular right-of-way shall

(a) comply with Clause 8.3.10 when designed as an overpass or underpass; or

(b) where at grade,

  (i) be perpendicular to the vehicular route being crossed;

  (ii) comply with Clauses 8.3.2 to 8.3.6; and

  (iii) comply with Clause 8.3.7, when signals are provided.

Commentary:

(1) For safety at pedestrian crossings, the corners should be free of obstructions, maintain adequate sight lines between drivers and pedestrians, design corner radii to ensure vehicles do not drive over the pedestrian area, ensure that crosswalks clearly indicate where crossings should occur, limit exposure to conflicting traffic, and provide refuges where necessary.

(2) Narrowing a roadway by constructing a bulb- or a bump-out at intersections reduces pedestrian risk by creating a shorter crossing distance. It also provides a safe waiting area for pedestrians, where they can see and be seen before crossing.

(3) This bulb or bump should extend along the curb for at least 2000 mm and include a curb ramp.

8.3.2 Pedestrian crossing variations

8.3.2.1 Pavement grade level

A pedestrian crossing with the crosswalk at the pavement grade level shall have its crosswalk connected to the pedestrian route beyond a vehicular right-of-way by a curb ramp complying with Clause 8.3.3.

8.3.2.2 Raised crossings

A raised crossing shall have its crosswalk connected to the pedestrian route beyond a vehicular right-of-way by a blended transition complying with Clause 8.3.3.

8.3.3 Curb ramps and blended transitions

8.3.3.1 Running slope

The running slope at a curb ramp or blended transition shall be

(a) for a curb ramp, between a ratio of 1:15 (6.66.%) and 1:10 (10%); and
(b) for a blended transition, not steeper than a ratio of 1:20 (5%).

8.3.3.2 Cross slope

The cross slope at a curb ramp or blended transition shall be

(a) not steeper than a ratio of 1:50 (2%) at intersections; and
(b) not steeper than a ratio of 1:20 (5%) at mid-block crossings.

8.3.3.3 Counter slope

When the counter slope at a curb ramp is greater than 11%, a transition area shall be provided such that it

(a) extends the full width of the curb ramp;
(b) begins at the base of the curb ramp and extends to a length of at least 600 mm on the street; and
(c) has a cross slope not steeper than in a ratio of 1:50 (2%).

Commentary:

(1) See Clause 3 for the definitions of running, cross, counter, and gutter slope.
(2) A severe transition change between the base of the curb ramp and the gutter slope should be avoided because it creates the risk that a person might trip or a wheelchair user get stuck at the gutter slope.

8.3.3.4 Surface

The surface of a curb ramp or blended transition shall

(a) be stable, firm, and slip-resistant;
(b) be texture and colour-contrasted with the adjacent surfaces;

(c) have a level transition to adjacent surfaces; and
(d) have a tactile attention indicator surface that
  (i) complies with Clause 4.3.5.3;
  (ii) extends the full width of the curb ramp or transition area, and
  (iii) has a length between 600 mm and 650 mm, starting between 150 mm and 200 mm from the face of the curb.

Commentary:

(1) A tactile attention indicator surface as well as the slope of the ramp provide the necessary indications that enable persons with a vision impairment to sense the transition between the sidewalk and the vehicular roadway. A tactile attention indicator surface is required on a curb ramp before a level curb-to-gutter transition is permissible.

(2) Use of blended transitions is restricted to locations of traffic calming, since the shallow slope of a blended transition can be difficult for persons with a vision impairment to detect.

8.3.3.5 Width

The width of a curb ramp or blended transition, exclusive of flared sides, shall be between 1200 and 1500 mm.

Commentary:

Curb ramps should not be continuous around a corner.

8.3.3.6 Flared sides

Flared sides shall
(a) be provided on a curb ramp or blended transition where pedestrians are likely to walk across it;
(b) have a slope, measured parallel to the curb line, with a ratio between 1:10 (10%) and 1:15 (6.66%) (see Figure 64);
(c) be slip resistant; and
(d) be texture and colour-contrasted with the adjacent surfaces.

Commentary:

(1) Ramps with returned curbs are an alternative design that can be used where pedestrians are not expected to walk across the ramp (see Figure 65).

(2) Built-up ramps projecting into the roadway should not be used because they are dangerous for the users and obstructive to vehicles.

(3) Contrasting pavement can assist pedestrians to be made aware of the onset of a curb ramp.

8.3.3.7 Curb ramp drainage

A curb ramp or blended transition shall

(a) provide for appropriate drainage so that water does not accumulate on the pedestrian route; and

(b) have no catch basin gratings within the pedestrian crossing.

8.3.3.8 Landings

A landing shall be located at the top of a curb ramp, level with the pedestrian route.

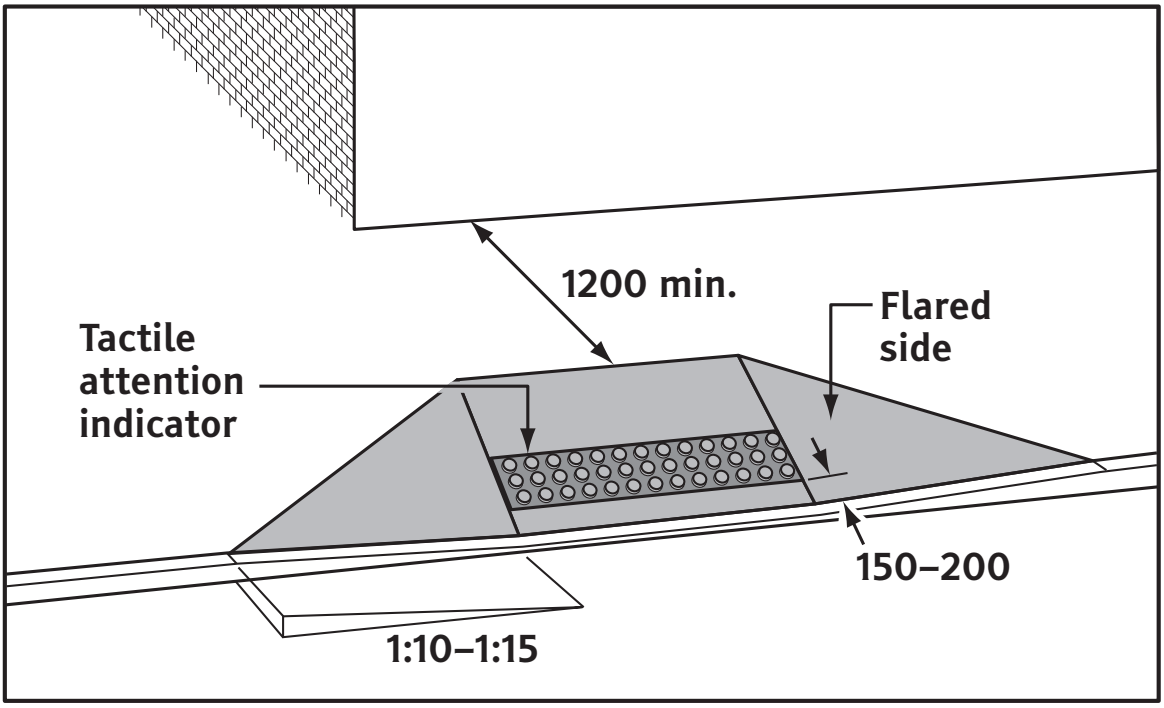

Figure 64
Accessible route and curb ramp with flared sides
(See Clauses 8.2.2 and 8.3.3.6.)

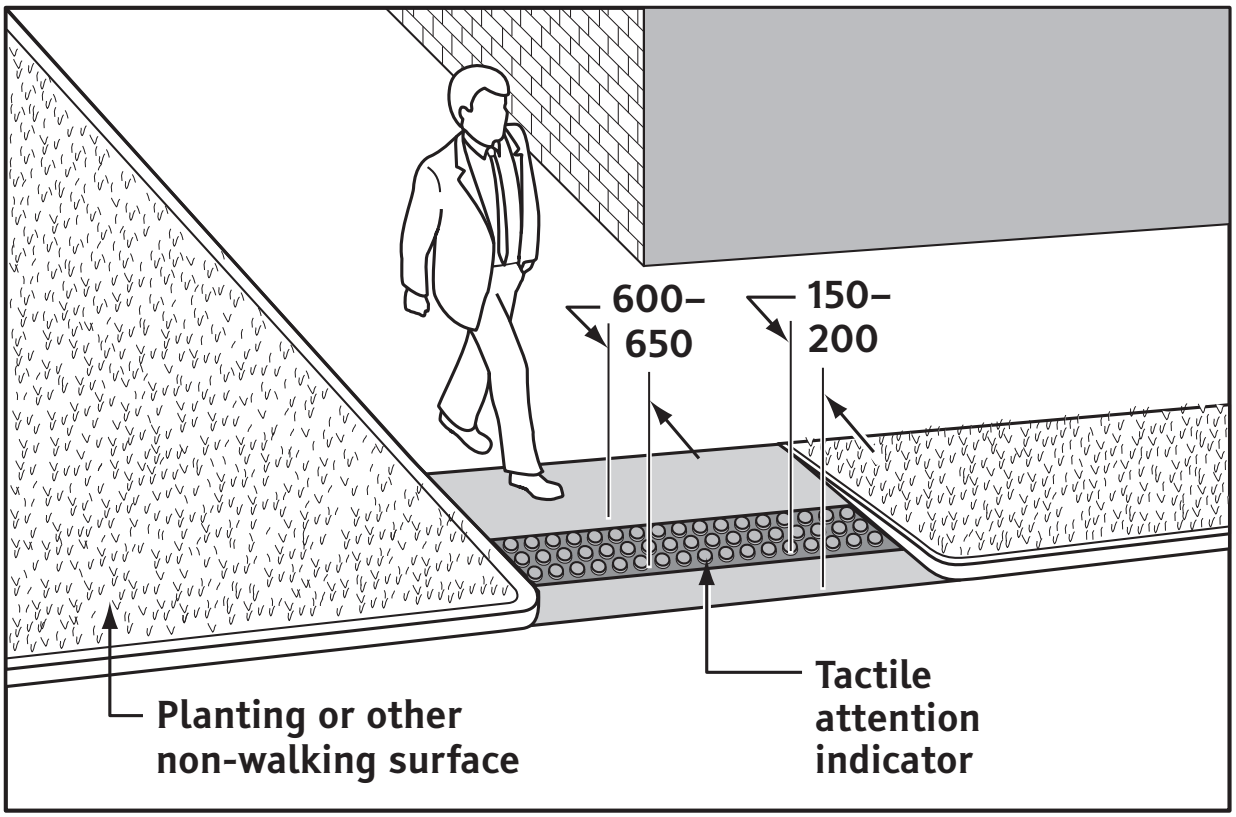

Figure 65
Curb ramp with returned curb sides
(See Clause 8.3.3.6.)

8.3.3.9 Alternative curb ramp layouts

Where a curb ramp is located on an accessible narrow route, the sidewalk itself shall

(a) be ramped down to a landing at street level, at a slope of not more than in a ratio of 1:15 (6.66%);
(b) have the landing the same width as the curb ramp; and
(c) have a tactile attention indicator surface that
  (i) complies with Clause 4.3.5.3; and
  (ii) starts between 150 mm and 200 mm from the face of the curb.

8.3.4 Crosswalks

8.3.4.1 Surface

A crosswalk shall

(a) be at least 1800 mm wide between pavement markings (where provided);
(b) have a running slope not steeper than in a ratio of 1:20 (5%);
(c) have a cross slope not exceeding
  (i) a ratio of 1:50 (2%) for crossings with stop control: or
  (ii) a ratio of 1:20 (5%) for crossings without stop control; and
(d) where crossing rail tracks at grade,
  (i) be level and flush with the top of the rail at its outer edges;
  (ii) be aligned with the top of the rail between the rails;
  (iii) where possible, have wheel flange way openings not more than 64 mm at non-freight rail tracks or 76 mm at freight rail tracks; and
  (iv) have a tactile attention indicator surface, complying with Clause 4.3.5.3, spanning the width of the pedestrian crossing and located so that the edge nearest the rail crossing is between 1800 and 4600 mm from the centreline of the nearest rail.

Commentary:

(1) The distance range between the tactile attention indicator surface and the nearest rail provides clearance for rail crossing signals and gates.
(2) When tracks are located in a street or highway that incorporates a pedestrian path, the tactile surfaces at the curb ramps eliminate the need for a second set of tactile indicators at the rail.

8.3.4.2 Pavement markings

Where provided, crosswalk pavement markings shall

(a) comply with the Manual of Uniform Traffic Control Devices for Canada; and
(b) be slip resistant.

Commentary:

(1) Pavement markings should clearly identify pedestrian crossing areas, bike lanes, and other locations where driver and pedestrian attention is especially important.

(2) Permanent tactile crosswalk lines can assist persons with a vision impairment to remain within the crossing at a vehicular right-of-way.

(3) Pavement marking materials should be chosen for durability and to minimize tripping or loss of traction for pedestrians and bicyclists.

(4) Perimeter pavement markings should be visible at night.

8.3.5 Alignment of pedestrian crossing components

Pedestrian crossing components shall be located to

(a) limit exposure to vehicular traffic by following a line that is perpendicular to the vehicular route being crossed;

(b) be fully outside the traffic, turning, or bus bay lanes of the parallel roadway;

(c) in the case of refuge islands and medians, where possible, have all components (e.g., curb ramps, blended transitions, crosswalk segments) in a single continuous lateral alignment; and

(d) have curb ramps or blended transitions

  (i) lead people directly into the crossing area designated for pedestrian use; and

  (ii) be located at the side of the crosswalk furthest from the parallel vehicular roadway (see Figure 66).

Commentary:

(1) When a roadway is skewed or the number of lanes differs from one side of an intersection to the other, it can be difficult for pedestrians to avoid straying into traffic lanes.

(2) Where irregularly shaped islands separate traffic lanes that do not follow parallel tracks, a channelized pedestrian route should be provided on the island to connect the crosswalk segments.

(3) The flared sides of curb ramps may be located outside the pedestrian crosswalk markings.

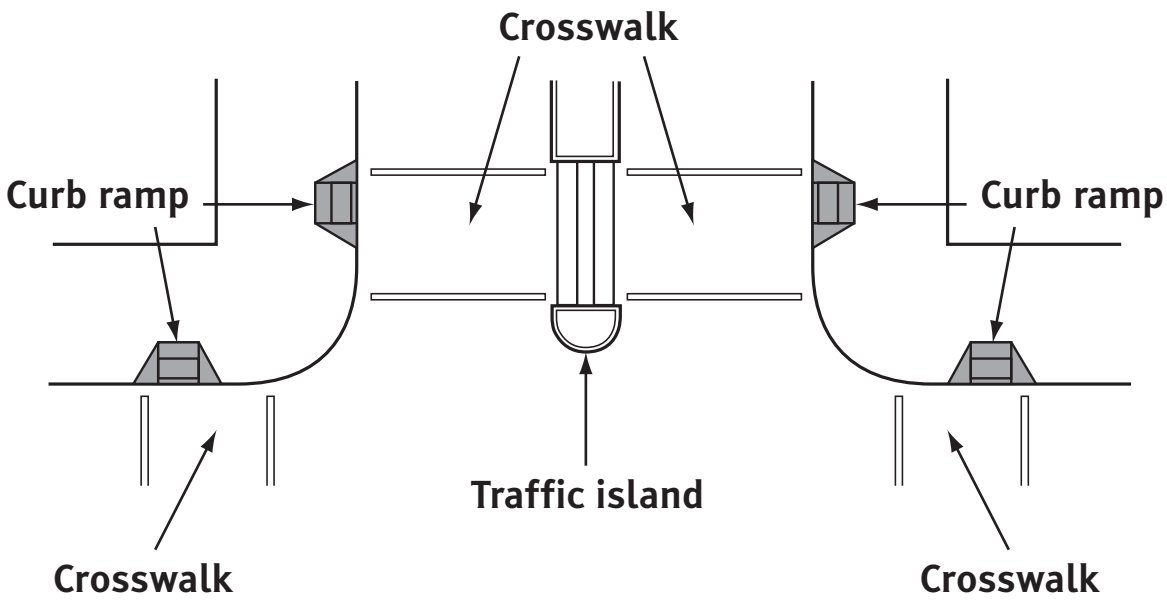

Figure 66
Intersection design
(See Clauses 8.3.5 and 8.3.6.3.)

8.3.6 Medians and pedestrian refuge islands

8.3.6.1 General

Where the pedestrian route connects crosswalk segments across a median or island, it shall

(a) provide an area at least 1500 mm wide to allow for passing;
(b) be at least 1800 mm long in the direction of pedestrian travel; and
(c) where longer than 2100 mm or changing direction, be channelized to define the route to be taken.

8.3.6.2 Raised medians or islands

Within the pedestrian crossing, a raised median or island shall either

(a) where cut through level with the roadway, comply with Clause 8.3.6.3; or

(b) where of sufficient length, have

  (i) at both sides, curb ramps or blended transitions complying with Clause 8.3.5 ; and

  (ii) a walkway at least 600 mm long between tactile attention indicator surfaces.

Commentary:

Raised islands should not project into an adjacent crosswalk, thus reducing its width.

8.3.6.3 Level medians and islands

Within a pedestrian crossing, a level island shall

(a) if less than 1800 mm long, not require a tactile attention indicator surface; or

(b) if more than 1800 mm long,

  (i) have at each roadway edge a tactile attention indicator 600 mm deep, complying with Clause 4.3.5.3; and

  (ii) have a walkway at least 600 mm deep between the tactile attention indicator surfaces (see Figure 66).

8.3.7 Pedestrian crossing signals

8.3.7.1 Accessible pedestrian signals (APS)

Where provided, an accessible pedestrian signal installation shall comply with the Guidelines for Understanding, Use and Implementation of Accessible Pedestrian Signals.

8.3.7.2 Activation push buttons at pedestrian crossings

Where provided, a pedestrian crossing activation push button shall either

(a) for accessible pedestrian signals, comply with Clause 8.3.7.1; or

(b) for conventional pedestrian signals

  (i) be adjacent to the accessible pedestrian route without obstructing it;

(ii) be located on a pole at a height of 1100 mm ± 150 mm above the level of the pedestrian route; and
(iii) have a clear level area 760 mm × 1200 mm adjacent to or overlapping the pedestrian route.

Commentary:

(1) To determine the suitability of an intersection for the installation of accessible pedestrian signals the process described in the Guidelines for Understanding, Use and Implementation of Accessible Pedestrian Signals, can be used. However, traffic control might require a pedestrian crossing activation push button.
(2) The push button pole should not be located on a curb ramp.
(3) The location of the pedestrian crossing activation buttons should not be obstructed by street furniture or snow banks.

8.3.7.3 Traffic walk signal interval

The timing of the pedestrian walk signal interval shall be calculated
(a) using a pedestrian walk speed not more than 1.1 m/s; and
(b) to include the entire length of the pedestrian crossing.

8.3.8 Speed bumps

Where a speed bump is installed, a clear level space on the roadway at least 1200 mm wide shall be provided between the speed bump and the edge of the roadway.

Commentary:

(1) A person using a wheeled mobility aid might require passage beyond the speed bump if part of the street is necessary to access his/her destination.
(2) Speed bumps can cause problems for persons with back problems and related disabilities since it is jarring to travel over a bump.

8.3.9 Bollards

Where bollards or curbs are located adjacent to a pedestrian route or space, they shall

(a) be colour-contrasted with their surroundings; and

(b) where access is intended between the bollards or curbs, provide a clear width between 920 mm and 1000 mm to allow the passage of wheeled mobility aids.

8.3.10 Underpasses and overpasses

8.3.10.1 Pedestrian access route

A pedestrian overpass or underpass shall contain a pedestrian access route that complies with Clause 8.2.

Commentary:

At pedestrian underpasses, sound damping measures should be used reduce echoes from vehicles, so as to allow a better acoustic interpretation of the environment.

8.3.10.2 Approach

Where the route has an approach slope steeper than a ratio of 1:20 (5%), the approach shall either

(a) be designed as a ramp
   (i) complying with Clause 8.2.7 for unprotected exterior installations; or
   (ii) if weather protected, complying with Clause 5.5.1; or

(b) be equipped with an elevating device that allows for independent operation and complies with either
   (i) Appendix E of ASME A17.1/CSA B44; or
   (ii) CSA B355.

Commentary:

(1) To avoid potential breakdown and maintenance outages, an approach that does not require an elevating device should be used.

(2) The user of an independently operated elevating device does not require either a key or another person to operate it.

8.4 Intersection design

8.4.1 General

Accessible pedestrian intersection elements shall be provided

(a) at all intersections in urban and suburban areas; and

(b) in rural areas, at intersections with a concentration of commercial or residential activity.

Commentary:

Intersection elements include items such as curb ramps, crosswalks, crossing signals, or tactile surface indicators.

8.4.2 Types of intersections

8.4.2.1 Uncontrolled access ramp intersections

Where an uncontrolled vehicular access ramp intersects a pedestrian route, it shall have

(a) a marked pedestrian crossing that complies with Clause 8.3;

(b) a vehicle stop line clearly defined by signage on and beside the roadway; and

(c) a traffic control device that complies with the requirements of the Manual of Uniform Traffic Control Devices, either

  (i) a YIELD here to pedestrians sign; or

  (ii) a signalized pedestrian crossing having an accessible pedestrian signal complying with Clause 8.3.7.

8.4.2.2 Sign controlled intersections

A sign controlled intersection with a pedestrian route shall

(a) have a marked pedestrian crossing that complies with Clause 8.4 for each controlled leg of the intersection; and

(b) where an uncontrolled slip lane forms part of the intersection, comply with Clause 8.4.2.1.

8.4.2.3 Signal controlled intersections

8.4.2.3.1 Design specifications

A signal controlled intersection shall comply with the Manual of Uniform Traffic Control Devices for Canada.

Commentary:

Consistent design helps make the layout and use of intersections readily apparent to pedestrians, some of whom might find wayfinding through an intersection a challenge.

8.4.2.3.2 General intersections

A general signal controlled intersection in a pedestrian route shall

(a) have a marked pedestrian crossing that complies with Clause 8.3 for each controlled leg of the intersection; and

(b) where an uncontrolled slip lane forms part of the intersection, comply with Clause 8.4.2.1.

8.4.2.3.3 Continuous or parallel flow intersections

A continuous or parallel flow intersection shall

(a) comply with Clause 8.4.2.3.1;

(b) be equipped with accessible pedestrian signals that comply with Clause 8.3.7;

(c) have
   (i) a marked pedestrian crossing that complies with Clause 8.3 for each controlled leg of the intersection; and
   (ii) tactile pedestrian crosswalk surfaces where the crossing is between opposing traffic flows; and

(d) have channelizing features or tactile pathways on islands where the pedestrian route is between opposing traffic flows.

8.4.2.3.4 Roundabout intersections

A roundabout intersection having a pedestrian route of travel shall

(a) have the pedestrian route alongside the roadway delineated from the vehicular route by curbs or other elements wherever a pedestrian street crossing is not intended;

(b) at each approach roadway that intersects the pedestrian route, have a marked pedestrian crossing that
   (i) complies with Clause 8.3; and
   (ii) is located at least 7.6 m from the circulation traffic lanes;

(c) have a tactile direction indicator surface that
   (i) complies with Clause 4.3.5.4;

(ii) extends from the centreline of the ramp or blended transition across the full width of the pedestrian route alongside the roadway; and

(iii) is 600 mm long; and

(d) for roundabout intersections with single-lane approach and exit legs, provide at each crosswalk a YIELD here to pedestrians sign that complies with the Manual of Uniform Traffic Control Devices.

Commentary:

(1) Because pedestrian crossings are usually located to the side of a pedestrian route around a roundabout, and since noise from continuously circulating traffic can mask useful audible cues, carefully delineated crosswalk approaches (with plantings, low enclosures, curbs, or other defined edges) can be useful in identifying the crosswalk location(s).

(2) Pedestrian crossings should be located away from circulating traffic lanes to avoid pedestrians from straying into continuously circulating traffic. Where they are available, crossings should make use of splitter islands for refuge areas.

(3) For multi-lane crossings, an accessible pedestrian signal or grade-separated pedestrian crossing should be provided.

8.4.2.4 Vehicular overpasses or underpasses

Where two vehicular rights-of-way meet at an overpass or underpass, the intersection shall

(a) provide a pedestrian route that complies with Clause 8.2 for each route where pedestrians are allowed;

(b) where marked pedestrian crossings are provided, comply with Clause 8.3; and

(c) where an uncontrolled ramp intersects the pedestrian route, comply with Clause 8.4.2.1.

8.4.2.5 Pedestrian mid-block crosswalks

Where a pedestrian crosswalk is installed at an uncontrolled, mid-block location to facilitate crossing a vehicular right-of-way, it shall

(a) have a marked pedestrian crossing that complies with Clause 8.3; and

(b) have traffic signals complying with the Manual of Uniform Traffic Control Devices for Canada and Clause 8.3.7.

8.4.2.6 Rail lines

Where a rail line right-of-way intersects a pedestrian route as defined in Clause 8.2, a pedestrian crossing shall be provided that complies with Clauses 8.3.3 and 8.3.4.

8.4.3 Intersection design features

Commentary:

(1) The layout of travel lanes, curb ramps, crosswalks, bicycle lanes, and transit stops all constitute part of the geometric roadway design. At intersections, it is essential that potential conflict points (particularly those that confront vulnerable intersection users such as pedestrians or bicyclists) be made evident, by offering an approaching driver, bicyclist, or pedestrian a clear view of one another.

(2) The desired vehicle and pedestrian actions can be facilitated by discouraging undesirable movements, providing safe refuges, offering way finding cues for bicyclists, and pedestrians, defining appropriate vehicular lanes, encouraging safe speeds, helping to separate points of conflict, or facilitating the movement of high-priority traffic flows.

8.4.3.1 Raised intersections

A raised intersection shall

(a) have its crosswalks connected to the pedestrian path beyond a vehicular right-of-way by a blended transition that complies with Clause 8.3.5;

(b) contain the crosswalks within the raised area of the intersection; and

(c) have one side of the crosswalk continuously attached to the grade break between the roadway approach slope and the raised area.

8.4.3.2 Intersection corners

Corner radii shall be designed to ensure that vehicles do not drive over pedestrian refuge areas.

Commentary:

Often pedestrians are not able to determine if or when a part of a vehicle will cut across an island or a corner refuge area.

8.4.3.3 Angle of intersection

Intersecting vehicular routes (not including access ramps) shall meet either

(a) at 90° angles for new intersections; or

(b) at angles not less than 75° where the right-of-way is restricted.

Commentary:

(1) Intersection approaches that meet at near right angles and merge at flat angles eliminate awkward sight lines for drivers and pedestrians, which can be dangerous for both.

(2) Skewed crossings expose pedestrians to vehicular traffic longer, thereby requiring an extended timing phase for the walk signal.

8.5 Transit stops

8.5.1 General

Equipment at transit stops, including shelters, shall

(a) not obstruct the accessible route; and

(b) comply with Clauses 4, 5.2, and 5.5.

8.5.2 Identification

A transit stop shall

(a) be identified in a visual and tactile manner as distinct from other facilities or elements along an accessible route;

(b) have signage complying to Clause 4.5, that, where routes are identified, provides the information visually and via either

  (i) in Braille and raised characters; or

  (ii) user or proximity-actuated audible signals;

(c) where a transit platform is separated from the pedestrian route by traffic lanes, have its identification located at the intersection of the pedestrian route and the pedestrian crossing to the transit platform;

(d) have no sharp edges or corners on equipment such as poles or signs; and

(e) where stop identification numbers are posted for real time transit information, have them in large print, Braille, and raised numerals.

Commentary:

(1) Posted schedules, timetables, and maps are not required to be in tactile or audible format.

(2) A tactile direction indicator complying with Clause 4.3.5.4, at least 600 mm long, and extending the width of the pedestrian route can assist persons with vision impairments to locate transit stops.

8.5.3 Boarding or alighting areas

A transit boarding or alighting area shall

(a) have a firm, stable, and slip-resistant surface;

(b) when higher than 250 mm above the transit right-of-way, have a tactile attention indicator surface along the unprotected drop-off edge that complies with Clause 4.3.5.3;
(c) at each loading position intended for users of a wheeled mobility aid, provide
  (i) a clear length of at least 2400 mm, measured perpendicular to the curb or vehicular route edge; and
  (ii) a clear width of at least 1500 mm, measured parallel to the vehicular route;
(d) have its grade with no slope steeper than in a ratio of 1:50 (2%);
(e) when at the side of a roadway, be connected to the pedestrian path by a pedestrian route complying with Clause 8.2; and
(f) when separated from a pedestrian path by traffic lanes, be connected to the pedestrian route by a pedestrian crossing
  (i) that complies with Clause 8.4; and
  (ii) is equipped with accessible pedestrian signals that comply with Clause 8.3.7.

Commentary:

Where possible, transit stops should not be separated from the pedestrian route by traffic lanes.

Transit stops should not be located on traffic islands.

8.5.4 Transit shelters

Where provided, a transit shelter shall
(a) have a level access to the accessible route;
(b) have the floor and ground surfaces comply with Clause 4.3;
(c) have protrusion hazards comply with Clause 4.4;
(d) have the signage comply with Clause 4.5;
(e) have an unobstructed clear floor area at least 1500 mm × 1500 mm directly inside the doorway;
(f) where no door is provided, have a clear opening at least 920 mm wide; and
(g) where a door is provided, comply with Clause 5.2.

Commentary:

(1) Transit shelters should provide adequate space to accommodate the general public as well as persons using mobility aids.

(2) Furnishings within the shelter should be clear of the immediate area inside the door or doorway.

8.6 Urban furniture and equipment

8.6.1 General

Urban furniture and equipment shall

(a) not obstruct any part of an accessible route (see Clause 8.2); and

(b) where pedestrian use or interaction is intended, be adjacent or connected to the accessible pedestrian route.

Commentary:

(1) The placement of sidewalk furniture is functionally important, but should not obstruct circulation.

(2) Straightforward and predictable routing along a sidewalk, with equipment, street furniture, landscaping, and utilities grouped together in an amenity zone (perhaps along the curb) will facilitate pedestrian circulation. This is particularly useful at turns, ramps, and in places and at objects that require additional manoeuvring space to approach and operate.

8.6.2 Amenity zone

Where urban elements are provided, they shall be located in an amenity zone that

(a) is consistently located on one or both sides of an accessible route;

(b) contains within it the required urban elements;

(c) does not reduce the required clear width of the accessible route;

(d) is at least 300 mm wide, with a preferred width of 600 mm;

(e) has its surface texture- and colour-contrasted with the surrounding area; and

(f) complies with Clause 8.5.

Commentary:

The preferred location for the amenity zone is at the curb edge.

8.6.3 Rest areas

8.6.3.1 Benches or seating

Where a bench or seating is provided, it shall

(a) comply with Clause 6.7.2; and

(b) have the adjacent level area separated by a raised curb or barrier from a downward slope that is potentially hazardous.

Commentary:

A walking surface that is texture- and colour-contrasted will help people to locate the rest area (see Figure 56).

8.6.3.2 Picnic tables

Where a picnic table is provided, it shall be

(a) located adjacent or connected to an accessible route;

(b) on a level and firm surface that extends at least 2000 mm on all sides; and

(c) equipped with a knee clearance under the table at least 750 mm wide × 480 mm deep × 680 mm high (see Figure 67).

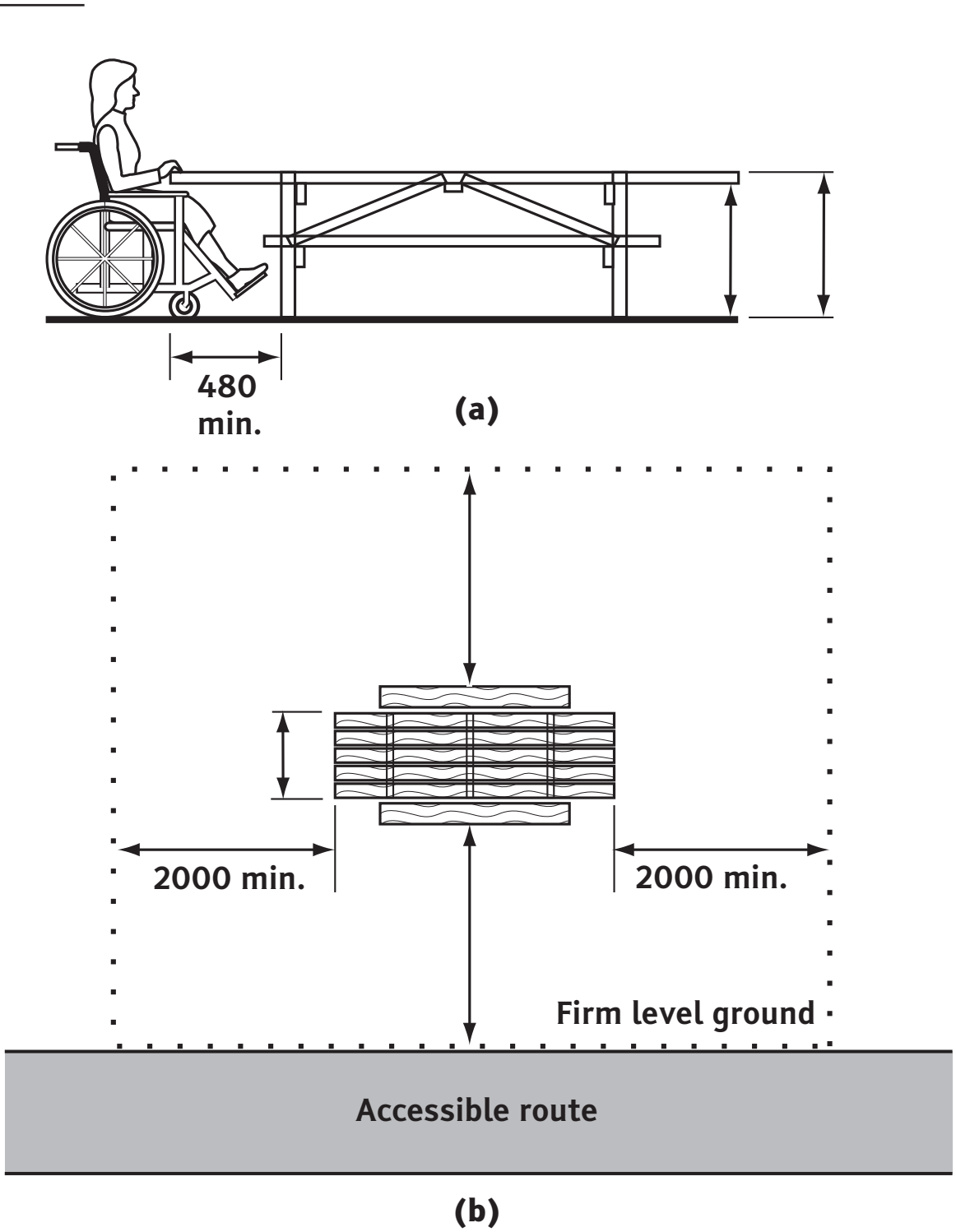

Figure 67
Picnic table
(See Clause 8.6.3.2.)

8.6.4 Public telephones

Where a public telephone is provided, it shall

(a) comply with Clause 6.6.2;
(b) be located adjacent or connected to an accessible route;
(c) be located on a firm, stable, and slip-resistant surface;
(d) have the ground surface around and under the telephone colour-contrasted with its surroundings; and
(e) be cane-detectable.

8.6.5 Drinking fountains

Where a drinking fountain is provided, it shall

(a) be located adjacent or connected to an accessible route; and
(b) comply with Clause 6.1 (see Figure 38).

8.6.6 Permanent outdoor washrooms

Where a permanent outdoor washroom is provided, at least one shall

(a) be located adjacent or connected to an accessible route;
(b) have a level access from the washroom entry door to the accessible route;
(c) comply with Clause 6.2; and
(d) have signage that complies with Clause 4.5.7.

8.6.7 Information kiosks

Where an information kiosk is provided, it shall

(a) be located adjacent or connected to an accessible route;
(b) have the area requirements comply with Clause 4.1;
(c) have the floor and ground surfaces comply with Clause 4.3;
(d) where provided, have the counters comply with Clause 6.7.1;
(e) have protruding objects comply with Clause 4.4;
(f) have its lower edge either
    (i) not higher than 680 mm above the ground; or
    (ii) where it is higher than 680 mm above the ground, not extend more than 100 mm beyond the supporting post(s); and
(g) where provided, have operating controls comply with Clause 4.2.

8.6.8 Self-service interactive devices

Where a self-service interactive device is provided (e.g., a parking meter, ticket dispenser, etc.), it shall

(a) comply with CSA B651.2; and
(b) be located adjacent to an accessible route.

8.6.9 Exterior signage

Exterior signage shall

(a) comply with Clause 4.5;
(b) have any protruding hazards comply with Clauses 4.4.1 and 4.4.2; and
(c) have any overhead obstructions comply with Clause 4.4.3.

Commentary:

Exterior signage includes sidewalk signage such as A-frame advertising, etc.

8.6.10 Bicycle stands

Where a bicycle stand is provided, it shall

(a) be located such that bicycles do not protrude into the accessible pedestrian route; and
(b) have the pavement surface around and under the bicycle stand textured and colour-contrasted to the surrounding surface.

8.6.11 Newspaper dispensers, mail or courier boxes

Where a newspaper dispenser, a mail (both street and community) or courier box is provided, it shall

(a) be located adjacent or connected to the accessible route;
(b) be securely fixed to the ground, post, or wall;
(c) have the ground surface firm, stable, and slip-resistant;
(d) have the operating mechanisms located between 900 and 1200 mm above ground;
(e) have the operating mechanisms comply with
    (i) Clauses 4.2.2 to 4.2.8; and
    (ii) CSA B651.2 for self-service interactive devices;
(f) be cane detectable to the ground;
(g) have signage that complies with Clause 4.5; and
(h) be colour-contrasted with their surroundings.

8.6.12 Waste receptacles, recycling bins, or ashtrays

Where a waste receptacle, recycling bin, or ashtray is located along an accessible route, it shall

(a) be located adjacent or connected to the accessible route;
(b) be securely fastened to the ground, post, or wall;
(c) have the opening or lid not higher than 1060 mm from the ground;
(d) have a clear ground area of at least 750 × 1200 mm at the opening or lid;
(e) be cane detectable to the ground; and
(f) be colour-contrasted with the surroundings.

8.6.13 Reflecting pools

An unprotected edge of a reflecting pool shall

(a) have a firm, stable, and slip-resistant surface;
(b) have adequate drainage so that water does not accumulate on the surface; and
(c) have a tactile attention indicator surface that complies with Clause 4.3.5.3.

8.6.14 Miscellaneous items

Miscellaneous items installed in the public right-of-way, such as an intersection traffic control box, a hydro transformer, or a hydrant, shall

(a) be located off the accessible route;
(b) comply with Clause 4.4; and
(c) in the case of guy wires, be clearly distinguished from their surroundings by colour contrasting materials.

8.7 Landscaping elements

8.7.1 Flower or shrub planters

Where a flower or shrub planter is provided along an accessible route, it shall

(a) be located off the accessible route; and
(b) comply with Clause 4.4.

8.7.2 Planting bed edges

The edges of planting beds located adjacent to an accessible route shall

(a) be clearly defined by texture and colour-contrast from the surroundings; and

(b) be designed to prevent ground cover or drainage from entering the pedestrian route.

8.7.3 Vegetation

Vegetation located adjacent to an accessible route or rest area shall

(a) have no thorns or sharp edges;

(b) have no planting that can drop large seed-pods overhanging or close-by;

(c) not be poisonous; and

(d) where tree branches or shrubs overhang the accessible route, comply with Clause 4.4.

Commentary:

(1) Vegetation can affect melting snow and ice on walkways or can create dark shadow areas causing inconsistent lighting. Before deciding on a location or type of plant, consideration should be given to the mature shadow patterns during summer and winter months.

(2) Because many trees with shallow or surface root systems heave or break the walking surface, caution should be used when choosing these varieties.

8.7.4 Guy wires

Guy wires located along an accessible pedestrian route shall

(a) have any protrusions comply with Clause 4.4; and

(b) be clearly distinguished from their surroundings by colour-contrasted materials.

8.7.5 Grates around trees

Where provided, a grate around a tree shall

(a) comply with Clause 4.3.4; and

(b) be slip resistant.

8.7.6 Tree guards

Where a tree guard is provided, it shall be cane detectable to comply with Clause 4.4.

8.8 Temporary facilities

8.8.1 Construction along an accessible route

Where a section of an accessible route is affected by construction, a safe and secure alternative pedestrian route through or around the improvement area shall

(a) comply with Clauses 4.3 and 4.4; and
(b) be announced with signage that complies with Clause 4.5.

8.8.2 Scaffolding

Where scaffolding is erected on or above an accessible route, it shall

(a) provide a walkway at least 1500 mm wide;
(b) have a height clearance that complies with Clause 4.4.3; and
(c) have all other requirements comply with Clause 5.1.

8.8.3 Temporary outdoor toilets

Where a temporary outdoor toilet is provided, at least one shall

(a) be located adjacent or connected to an accessible route;
(b) have toilet identification that complies with Clause 4.5.7;
(c) have the entry door level with or ramped to the accessible route;
(d) have a door that
    (i) opens to the outside; and
    (ii) is at least 810 mm wide;
(e) have an interior space at least 1600 × 1500 mm; and
(f) have a toilet that
    (i) has the top of the seat between 400 and 460 mm from the floor;
    (ii) has grab bars that comply with Clause 6.2.6.4; and
    (iii) has a toilet paper dispenser that complies with Clause 6.2.6.5.

9 Vehicular access

9.1 Scope

The requirements of this Clause deal with passenger pick-up areas and with designated parking spaces, which may be located in either an exterior area or an interior structure.

Commentary:

A passenger pick-up area is also assumed to be a drop-off area.

9.2 Pedestrian routes

A pedestrian route from a passenger pick-up area or a designated parking space shall

(a) be part of the shortest accessible route to the building or facility entrance;
(b) where it is exterior, comply with Clause 8.2; and
(c) where it is interior, comply with Clause 5.1.

Commentary:

(1) Pick-up areas that serve a particular building and parking spaces designated for persons who use mobility aids or who have mobility limitations should be located on the shortest possible pedestrian route to an accessible entrance.

(2) In independent parking structures or lots that do not serve a particular building, the designated parking spaces should be located on the shortest possible pedestrian route to an accessible entrance of the parking facility.

9.3 Passenger pick-up areas

9.3.1 Access aisle

At a passenger pick-up area, a side access aisle shall be provided on the roadway that is

(a) adjacent and parallel to the accessible route;
(b) at least 1500 mm wide × 6000 mm long; and
(c) separated from the walkway either
    (i) by a curb containing a curb ramp that complies with Clause 8.3.3; or
    (ii) where there is no curb, by a tactile attention indicator surface that complies with Clause 4.3.5.3 (see Figure 68).

Commentary:

Passengers using wheelchairs require a transfer space level with the roadway.

9.3.2 Height clearance

The clearance from the pavement to the underside of any ceiling structure or hanging object shall be at least 2750 mm

(a) at the passenger pick-up area; and
(b) along the vehicular route from the site entrance (see Figure 69).

Commentary:

Covered passenger pick-up areas are recommended.

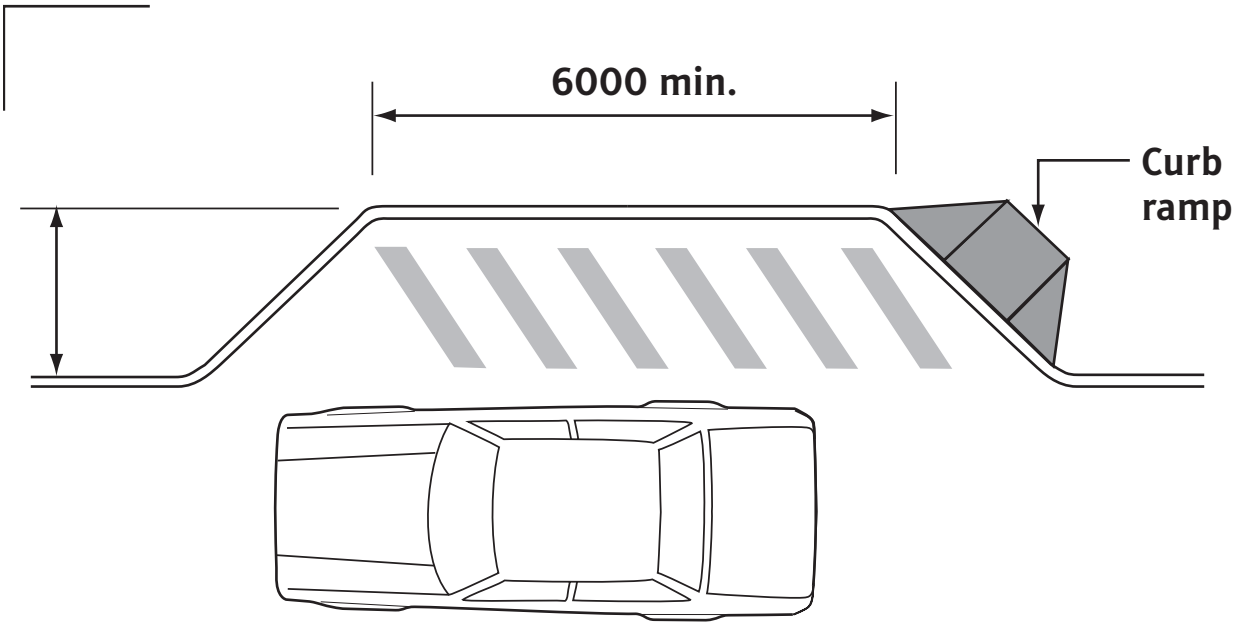

Figure 68
Access aisle at passenger pick-up area
(See Clause 9.3.1.)

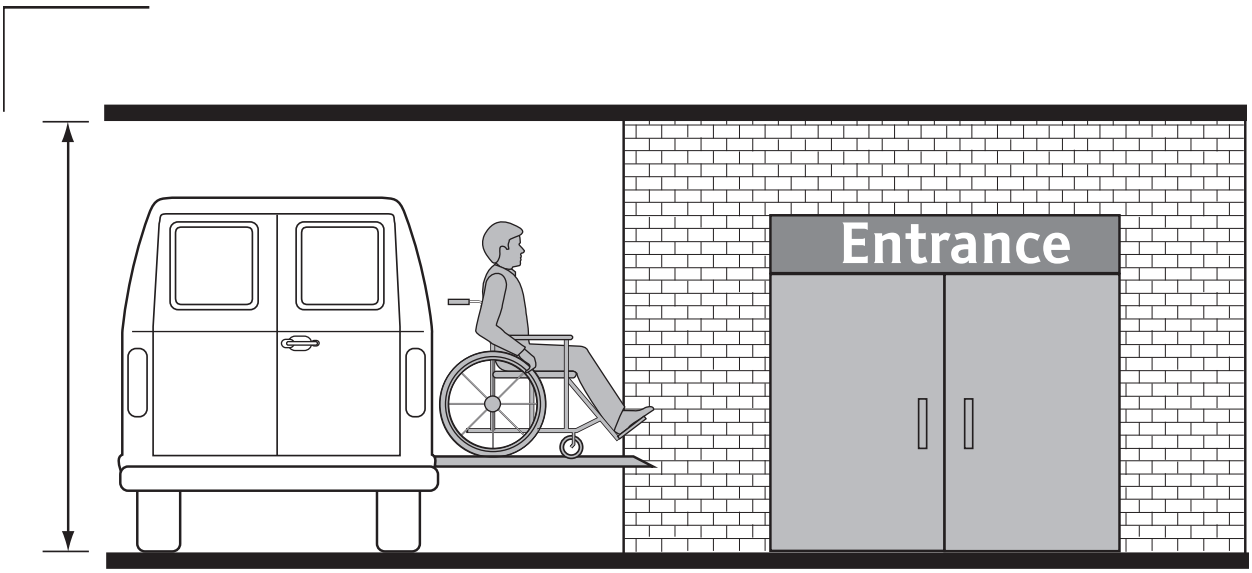

Figure 69
Height clearance at passenger pick-up area
(See Clauses 9.3.2 and 9.5.5.)

9.4 Signage for designated parking

9.4.1 Designated spaces

A designated parking space shall be identified by

(a) a vertically mounted sign; and

(b) the International symbol of access painted on the pavement (see Figure 11).

Commentary:

(1) The location of designated parking spaces should be identified for drivers entering a parking lot or structure by means of directional signs along the route leading to them [see Figure 70(b)].

(2) The vertical sign should be located so that it is visible to a vehicle driver approaching the space, but not to create a protrusion hazard.

(3) Where on-street parking is provided, at least 10% of the spaces per block should be a designated parking space, but never less than one of two or more spaces.

(4) In parking lots, designated car parking spaces should be provided in compliance with local municipal or provincial regulations. In the absence of such regulations, Table 7 offers a guide to how many such spaces should be provided.

Table 7
Recommended number of designated parking spaces
(See Clause 9.4.1.)

Number of car parking spaces	Number of designated wide parking spaces	Number of limited mobility parking spaces
2–50	1–3	2–6
51–100	2–4	4–8
101–200	4–8	8–16
201–300	5–10	10–20
301–500	6–12	12–24
Over 500	6–12 plus 1–3 for every 100 spaces over 500	12–24 plus 2–6 for every 100 spaces over 500

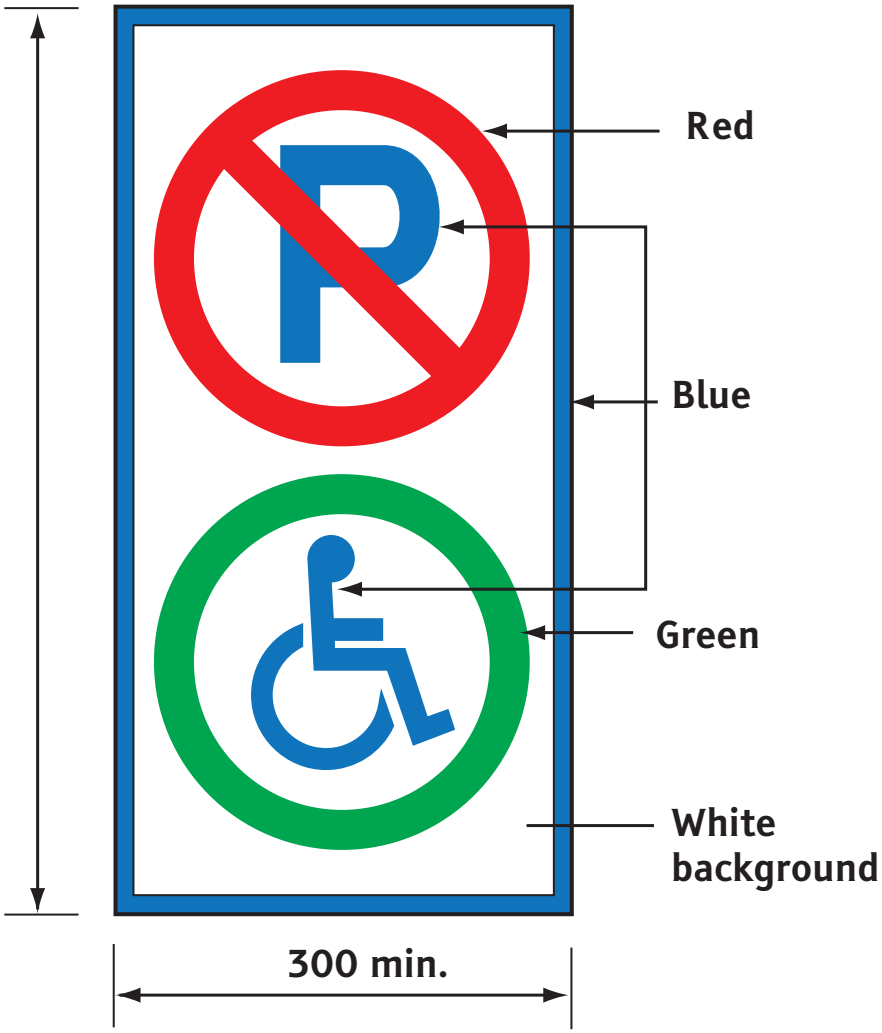

(a)
Uniform traffic control sign

Figure 70
Designated parking signs
(See Clauses 9.4.1 and 9.4.2.)

(Continued)

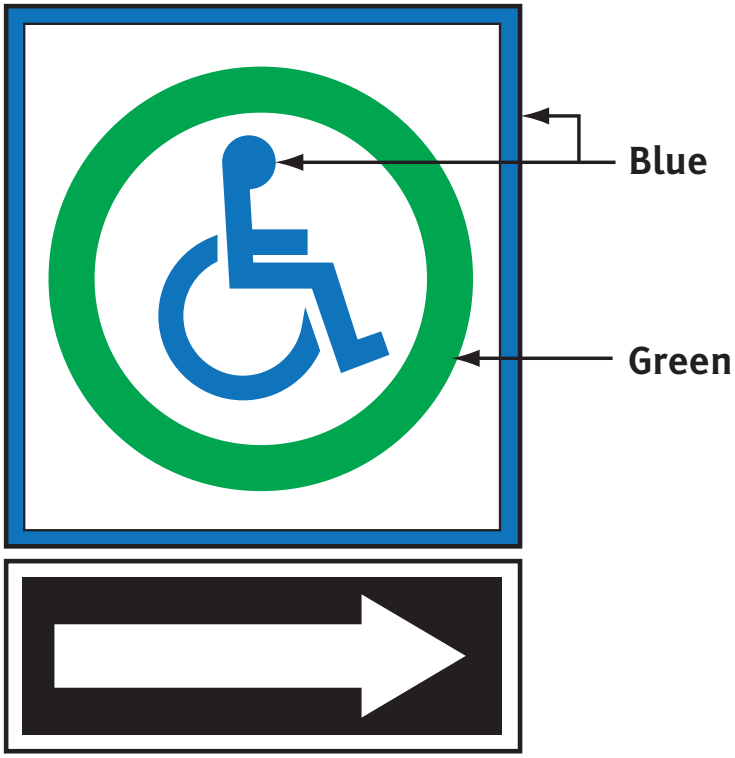

(b)
Directional sign to parking spaces

Figure 70 (Concluded)

9.4.2 Vertical signs

A vertical sign shall

(a) be at least 300 mm wide × 450 mm high;

(b) have the centre of the sign between 1500 to 2000 mm from the ground;

(c) incorporate the International symbol of access (see Figure 11); and

(d) comply with Clause 4.4.

Commentary:

The vertical sign should be one that is officially recognized by the local jurisdiction or be the sign from the Manual of Uniform Traffic Control Devices for Canada [see Figure 70(a)].

9.4.3 Pavement signs

A painted sign on the pavement shall

(a) be located in the centre of the parking space; and

(b) have the International symbol of access (see Figure 11)

  (i) at least 1000 mm long; and

  (ii) colour-contrasted with the background pavement.

9.5 Designated parking

9.5.1 Surface

A designated parking space and its adjacent side aisle shall

(a) have a surface that is level, stable, firm, and slip-resistant;

(b) on the side access aisle, have diagonal markings that resist fading or removal; and

(c) where bollards or curbs separate the vehicular area from a pedestrian route, have them comply with Clause 8.3.9.

9.5.2 Designated spaces for cars

A designated parking space for a car shall

(a) be at least 2400 mm wide;

(b) have an adjacent side access aisle at least 1500 mm wide (see Figures 71, 72, and 73); and

(c) for parallel parking, have an adjacent rear passage/aisle at least 900 mm wide.

Commentary:

(1) An accessible route should not require people to pass behind vehicles that might be backing out.

(2) Two designated parking spaces may share a common side access aisle.

(3) Bollards or curbs should not impede access to the vehicle or its side access aisle.

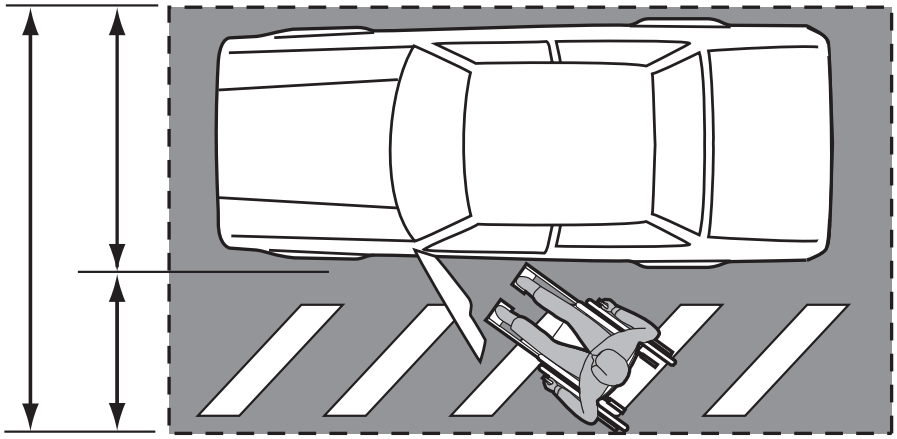

Figure 71
Car parking space
(See Clause 9.5.2.)

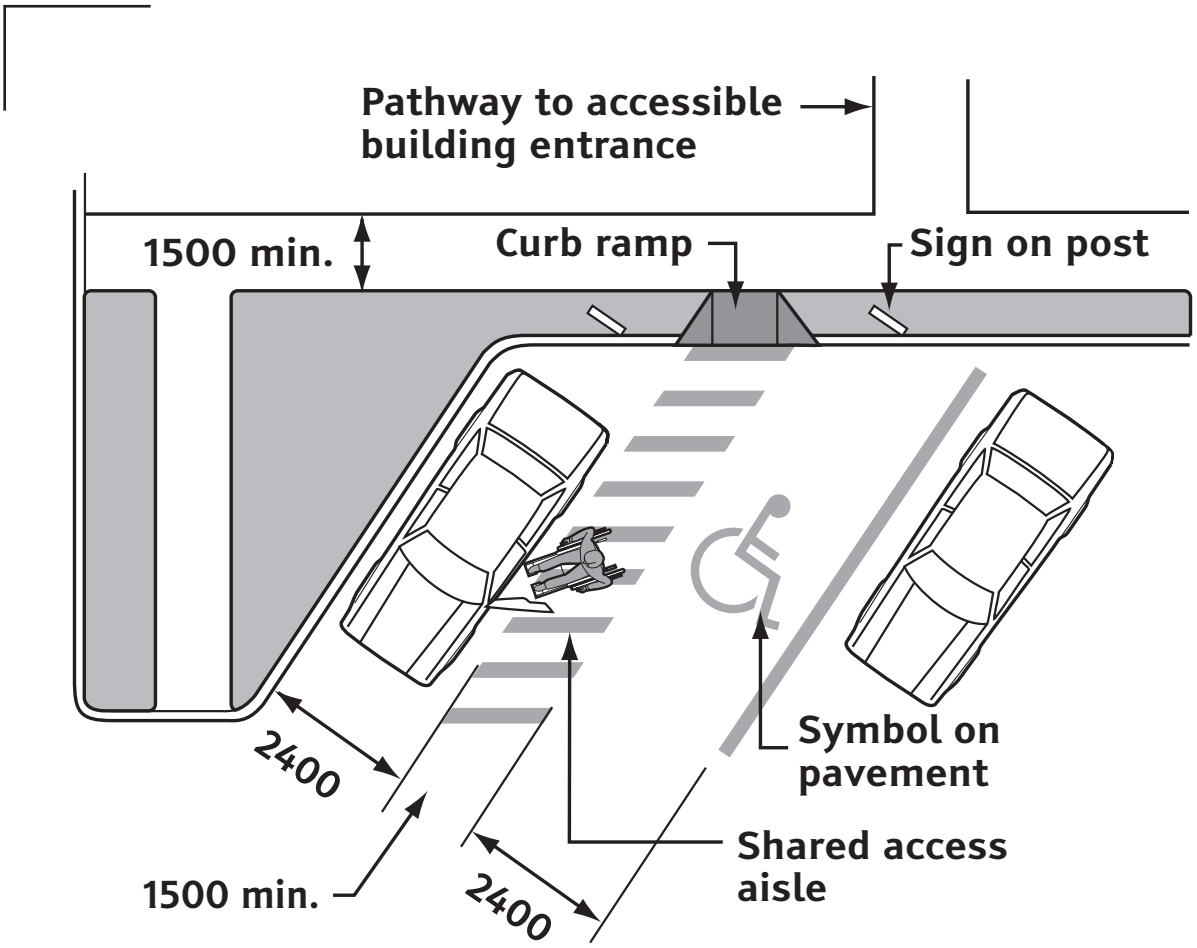

Figure 72
Car parking space, diagonal to curb
(See Clause 9.5.2.)

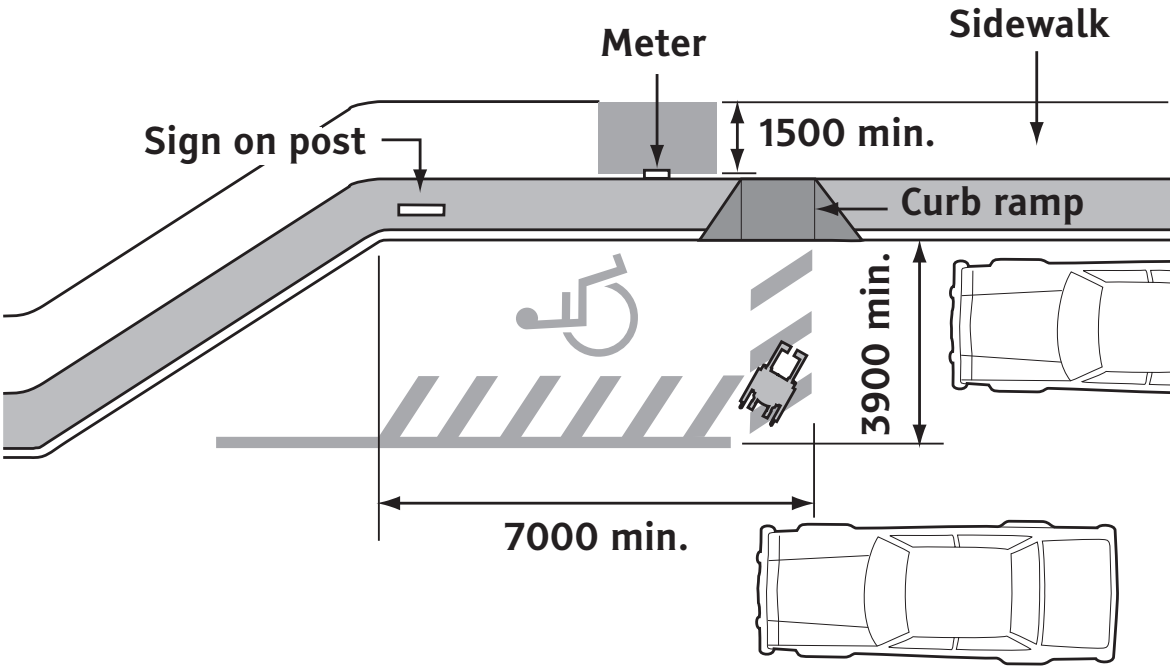

Figure 73
Parallel car parking space
(See Clause 9.5.2.)

9.5.3 Designated car spaces for limited mobility users

Where provided as a courtesy, a designated car space for users with limited mobility shall be

(a) at least 2400 mm wide; and

(b) identified by a sign for limited mobility access.

Commentary:

(1) Limited mobility car users include persons with heart or respiratory problems, or those with aids such as canes or crutches.

(2) Limited mobility users appreciate a parking space close to the facility entrance, but do not require a side access aisle to enter the vehicle.

9.5.4 Designated spaces for vans

A designated parking space for a van shall

(a) be at least 2600 mm wide;

(b) have an adjacent side access aisle at least 2000 mm wide (see Figure 74); and

(c) have an adjacent rear access aisle at least 2000 mm long (see Figure 75).

Commentary:

(1) Vans require a wider parking space because wheelchair entry into the van is often via a side door with a platform lift or a removable metal ramp that extends outside the van.

(2) An additional manoeuvring area is required beyond the platform lift or ramp. For parallel parking, a wider sidewalk might be necessary to allow for the required manoeuvring area. For parallel van parking, a rear access aisle is also required because some vans have the wheelchair entry at the back of the vehicle.

(3) The number of designated van spaces should be one van space for every six designated car spaces.

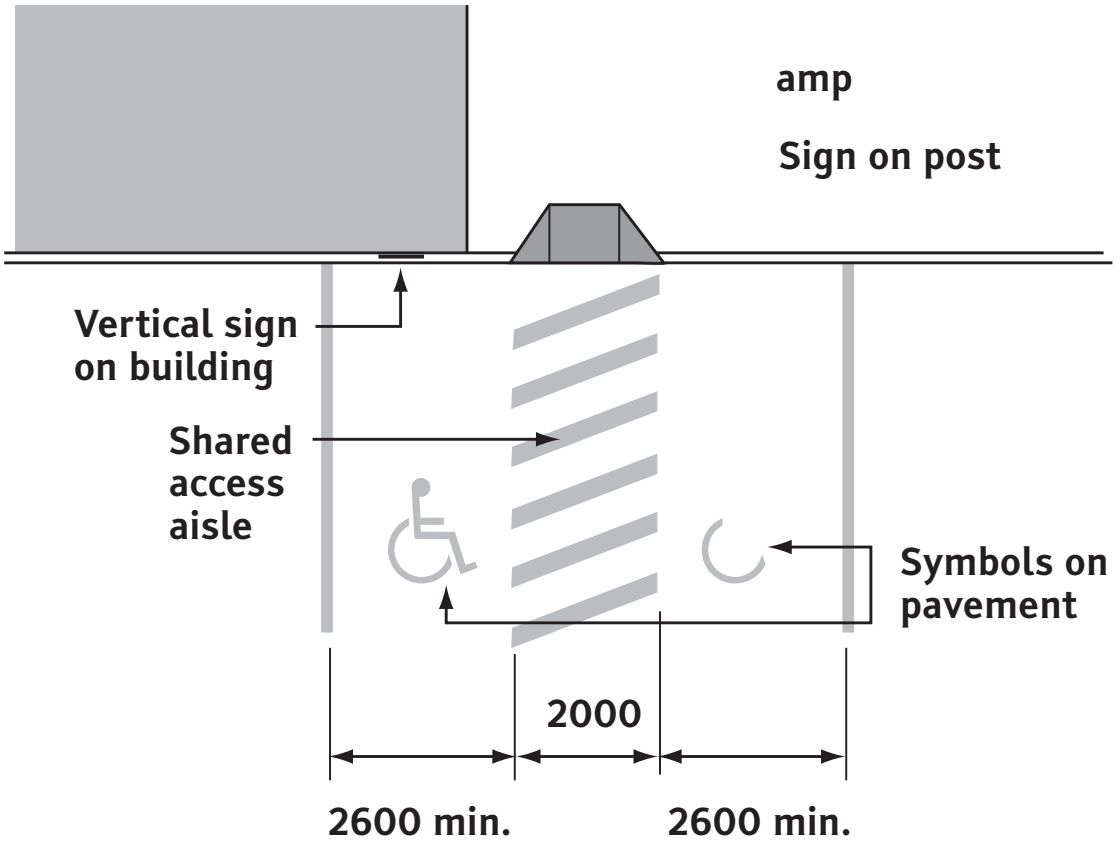

Figure 74
Perpendicular van parking space
(See Clause 9.5.4.)

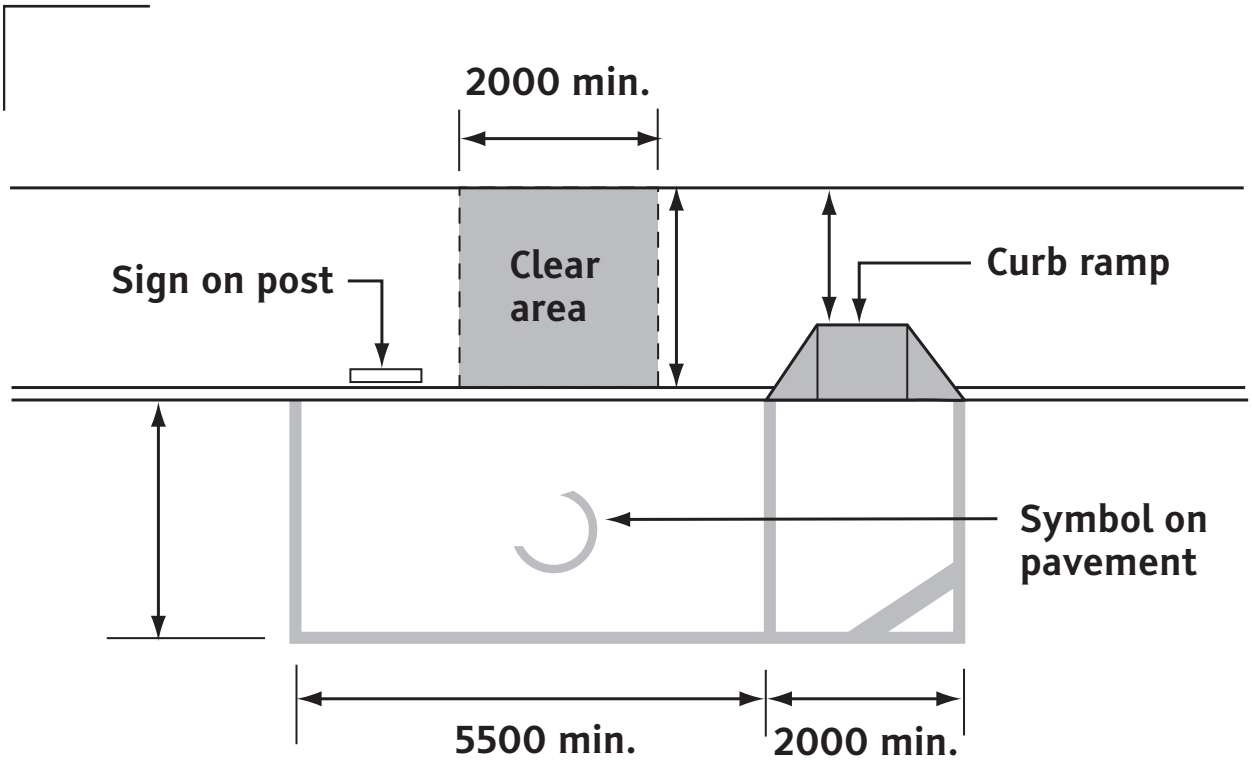

Figure 75
Parallel van parking space
(See Clause 9.5.4.)

9.5.5 Height clearance for vans

The clearance from the pavement to the underside of any ceiling structure or hanging object shall be at least 2750 mm

(a) along the vehicular route; and

(b) at the designated van space(s) (see Figure 69).

Commentary:

Vans with a platform lift or a ramp for wheelchair access can be higher than standard vans and require a higher clearance in garages.

9.6 Ticketing dispensers or paying machines

A ticketing dispenser or payment machine for parking (at street side or in a parking facility) shall

(a) have its self-service interactive device comply with Clause 8.6.8; and

(b) be accessed by a route that complies with either

  (i) Clause 5.1 for an interior location; or

  (ii) Clause 8.2 for an exterior location.

Commentary:

(1) Ticket dispensers or payment machines (other than those accessed from inside a vehicle) should be located as close as possible to the designated parking space(s).

(2) Safe access to and clearance around a self-service device are important considerations when establishing designated parking spaces.

(3) Potential interference from other parked vehicles or site elements such as planters should be avoided.

Annex A (informative)
Environmental considerations

Note: This Annex is not a mandatory part of this Standard.

A.1 Scope

This Annex deals with issues that extend beyond the strict definition of the technical specifications contained in this Standard. These issues are important to consider in creating accessible environments that serve all users, who might have various abilities and strengths. For example, functional or cognitive barriers can arise where

(a) the overall architectural space is confusing or illogical;
(b) the architectural features are overly repetitive;
(c) excessive noise interferes with the enjoyment and use of the facility;
(d) lighting hinders the safe use of the space;
(e) the air quality is poor; and
(f) the information provided is conflicting or difficult to read or understand.

A.2 Wayfinding

"Wayfinding" is a term that describes the spatial problem-solving process that a person uses to reach a destination. A mental "map" is formed of the overall setting and the desired destination. This map is based on information obtained from "orientation cues" that are available from the setting's environment. These cues include not only signage, but also the overall spatial forms, structures, sounds, surface textures, colours, illumination levels, architectural features, etc. Tactile maps and/or recorded instructions can augment these orientation cues and enable people to find their way independently, even in complex settings. A well-designed setting can thus be spatially gratifying and simple enough for persons to "wayfind" if there are adequate, varied, and non-conflicting wayfinding cues available to the individual user.

References:

Arthur, Paul, and Passini, Romedi. **Wayfinding: People, Signs and Architecture**. New York: McGraw-Hill, 1992.

Passini, Romedi. **Wayfinding in Architecture**. New York: Van Nostrand Reinhold, 1984. (Part of the Environmental Design Series #4.)

A.3 Acoustics

Acoustics play an important role in accessible design, since they can distort or enhance verbal information, as well as provide auditory information cues. For example, the careful application of sound insulation and absorbing materials on ceilings, walls, and floors is important in many settings (for work, entertainment, transportation, shopping, dining, etc.), particularly for persons with hearing loss. As a contrast to this, appropriate auditory cues along circulation routes and at destination points serve as useful wayfinding clues, especially for persons who rely upon hearing to orient themselves.

Reference:

Saunders, David, et al. **Acoustics in the Built Environment: Advice for the Design Team**. London: Architectural Press, 1997.

A.4 Illumination

Appropriate illumination not only allows persons to see things better, but also allows them to follow routes and to participate in activities. Natural light is an important feature in many areas, but it should be controlled so as to reduce glare, minimize reflections, and avoid excessive light and shadow. Artificial illumination is essential to ensure that persons can read signage, identify obstacles or hazards, and generally feel secure in a space. Dedicated illumination to highlight work areas, information locations, and transition places (entrances, elevators, etc.) is also necessary to supplement general lighting levels.

References:

IESNA RP-28-98: **Lighting and the Visual Environment for Senior Living**. New York: Illuminating Engineering Society of North America, 1998.

IESNA HB-9-00: **Lighting Handbook**. 9th ed. New York: Illuminating Engineering Society of North America, 2000.

A.5 Indoor air quality

Construction, furnishing, or decorative materials should not give off gases that affect the quality of indoor air. Contaminants such as gases, dust, and volatile organic compounds should be minimized. Adequate ventilation (natural and mechanical) is needed to dilute any contaminants and to provide fresh air to the occupants.

References:

ASHRAE 62: **Ventilation for Acceptable Indoor Air Quality**. Atlanta: American Society of Heating, Refrigeration and Air Conditioning Engineers, 2010.

CMHC 61089: **Building Materials for the Environmentally Hypersensitive**. Ottawa: Canada Mortgage and Housing Corporation, 1997.

CSA Z204: **Guidelines for Managing Indoor Air Quality in Office Buildings**. Toronto: Canadian Standards Association, 1994 (R1999).

Annex B (informative)
Anthropometrics of mobility aid users

Note: This Annex is not a mandatory part of this Standard.

B.1 Scope

This Annex contains dimensions that can be used for guidance when designing accessible facilities and equipment for persons using mobility aids.

B.2 Reach ranges for a person in a manual wheelchair

B.2.1 Forward reach without obstruction

The highest forward reach is 1200 mm from the floor, and the lowest forward reach is 400 mm from the floor (see Figure B.1).

B.2.2 Forward reach over obstruction

The highest forward reach is 1100 mm from the floor, which allows for a touch-reach over a 600 mm deep obstruction or a grasp-reach over a 500 mm deep obstruction (see Figure B.2).

B.2.3 Side reach without obstruction

The highest side reach for touch is 1400 mm from the floor, and the lowest side reach for touch is 230 mm from the floor (see Figure B.3).

B.2.4 Side reach over obstruction

The highest side reach over an 860 mm high obstruction is 1200 mm from the floor, which allows for a touch-reach depth of 600 mm or a grasp-reach depth of 500 mm (see Figure B.4).

Commentary:

When designing for a specific individual, that person's actual reach ranges should be taken into account.

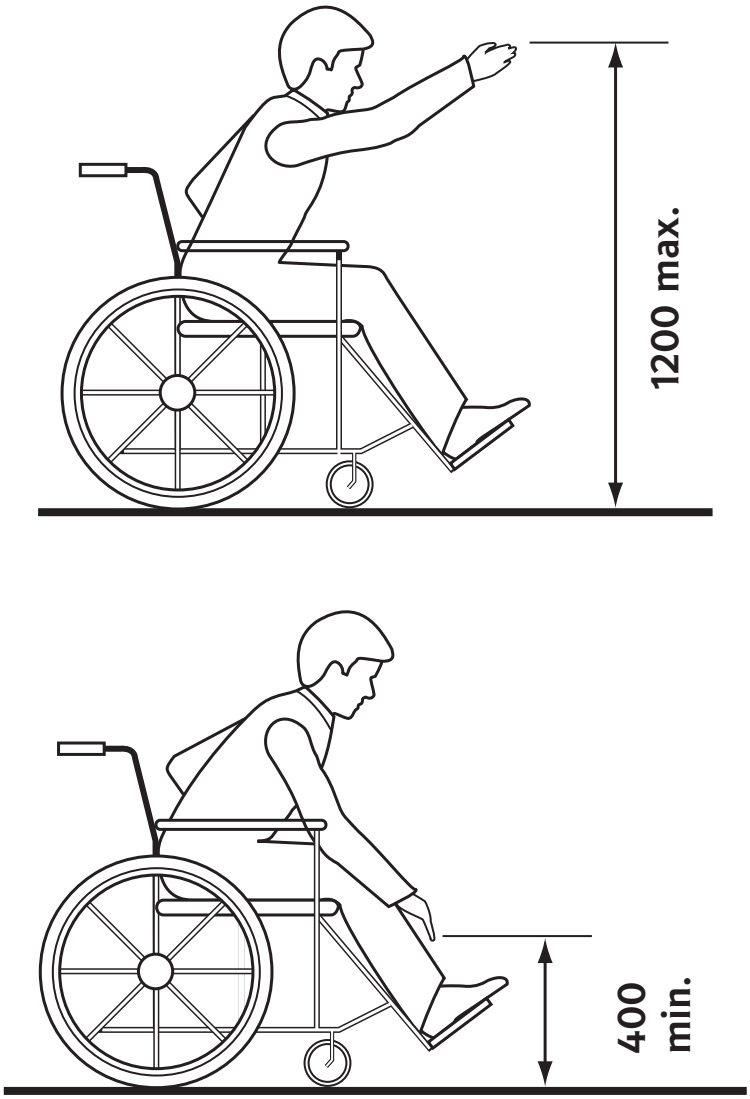

Figure B.1
Forward reach without obstruction
(See Clause B.2.1.)

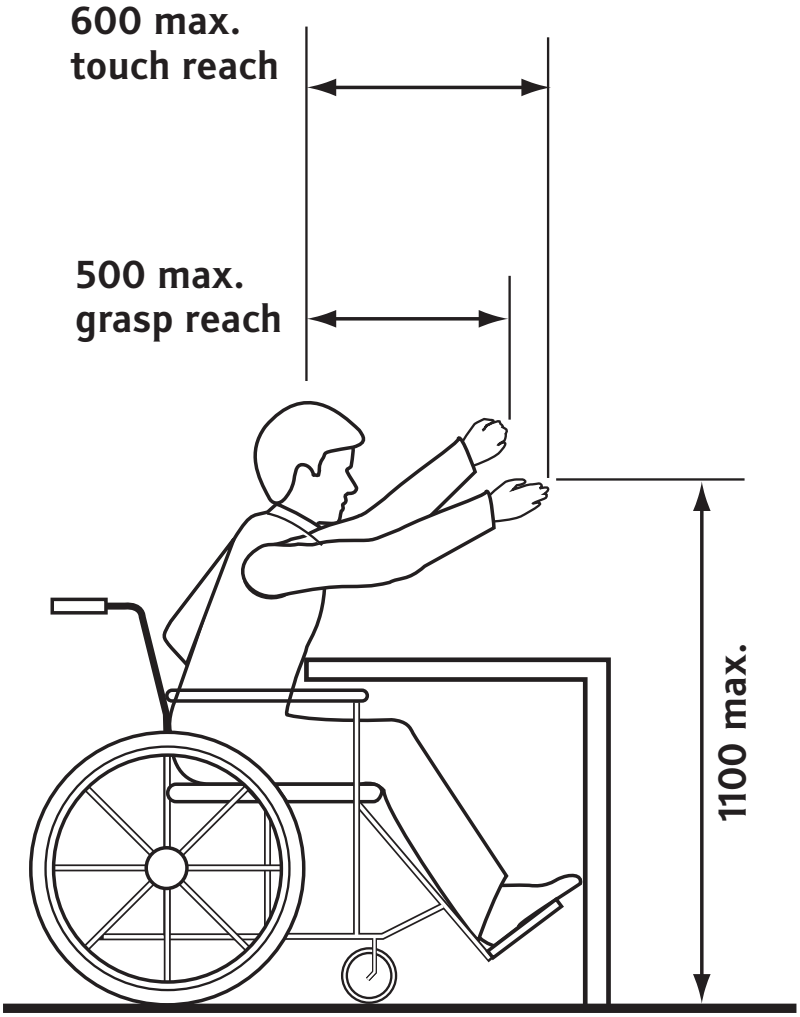

Figure B.2
Forward reach over obstruction
(See Clause B.2.2.)

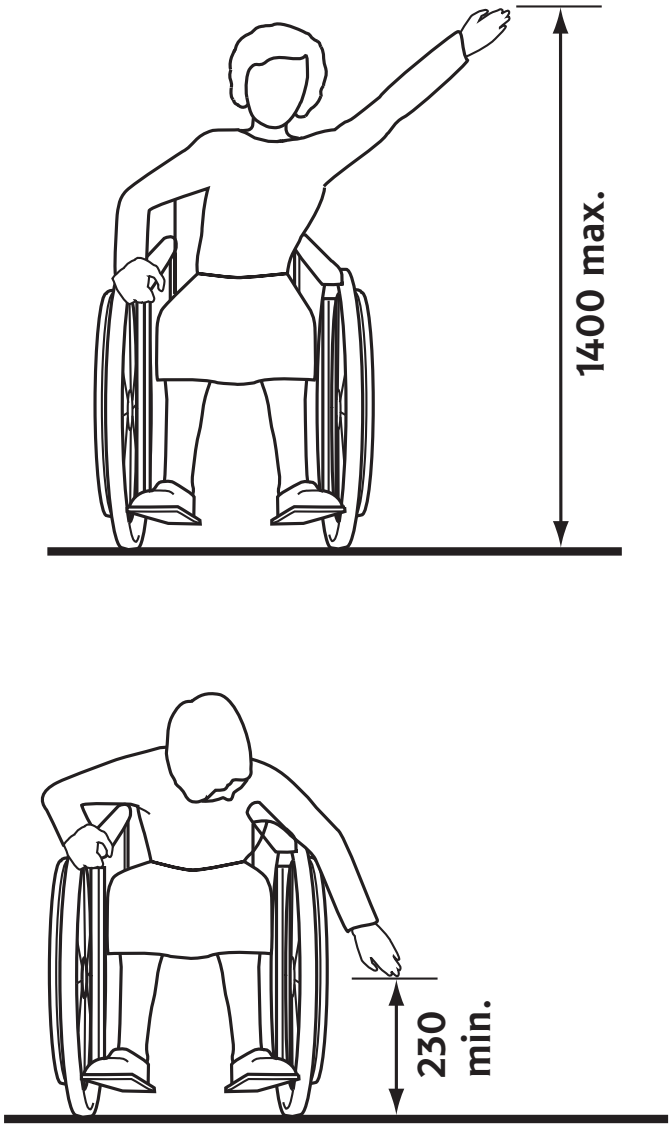

Figure B.3
Side reach without obstruction
(See Clause B.2.3.)

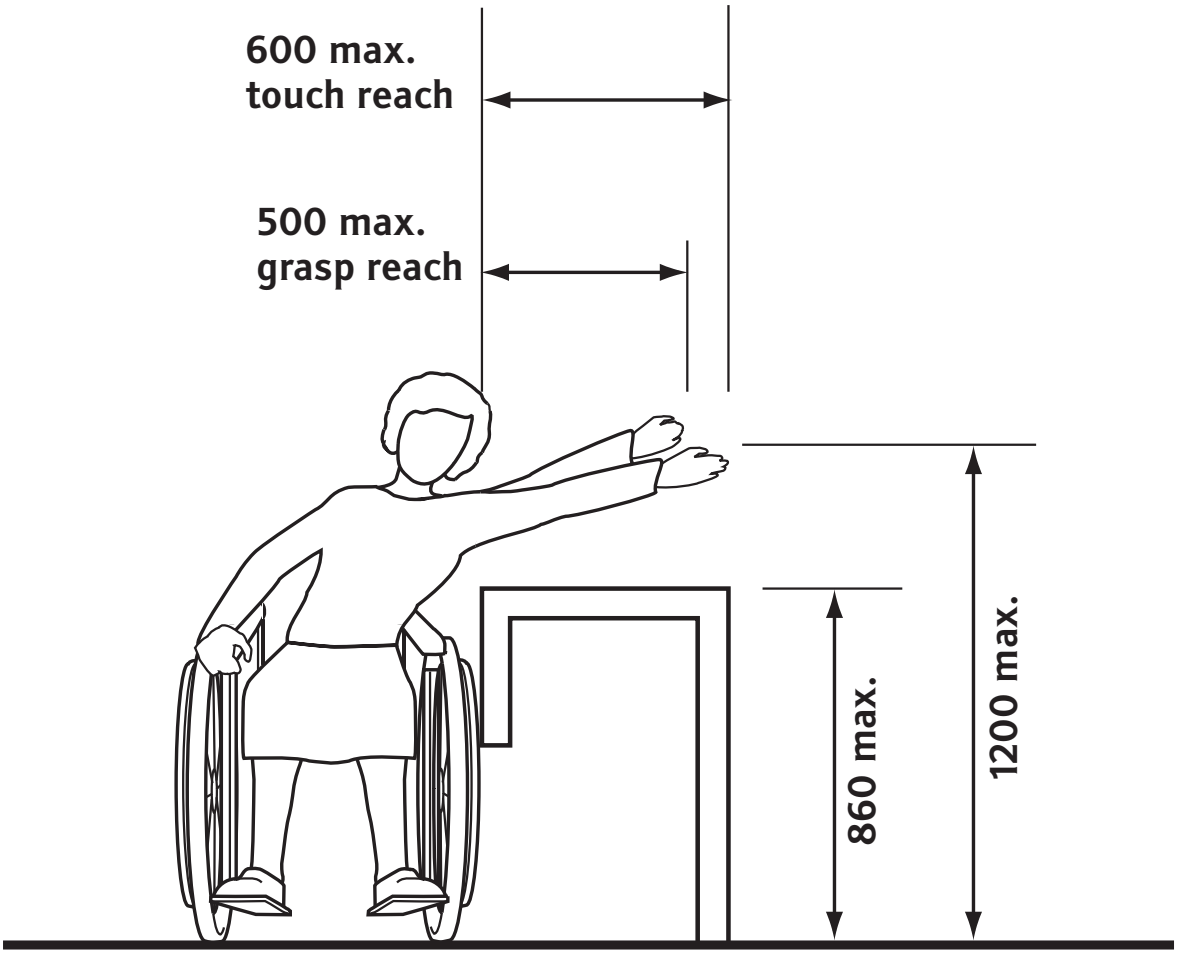

Figure B.4
Side reach over obstruction
(See Clause B.2.4.)

B.3 Walkway widths for persons using crutches

Although people who use walking aids can manoeuvre through door openings of 810 mm clear width, for comfortable gaits they require a walkway width of 920 mm (see Figure B.5). Crutch tips, which often extend down at a wide angle, are a hazard in narrow walkways where they might not be seen by other pedestrians.

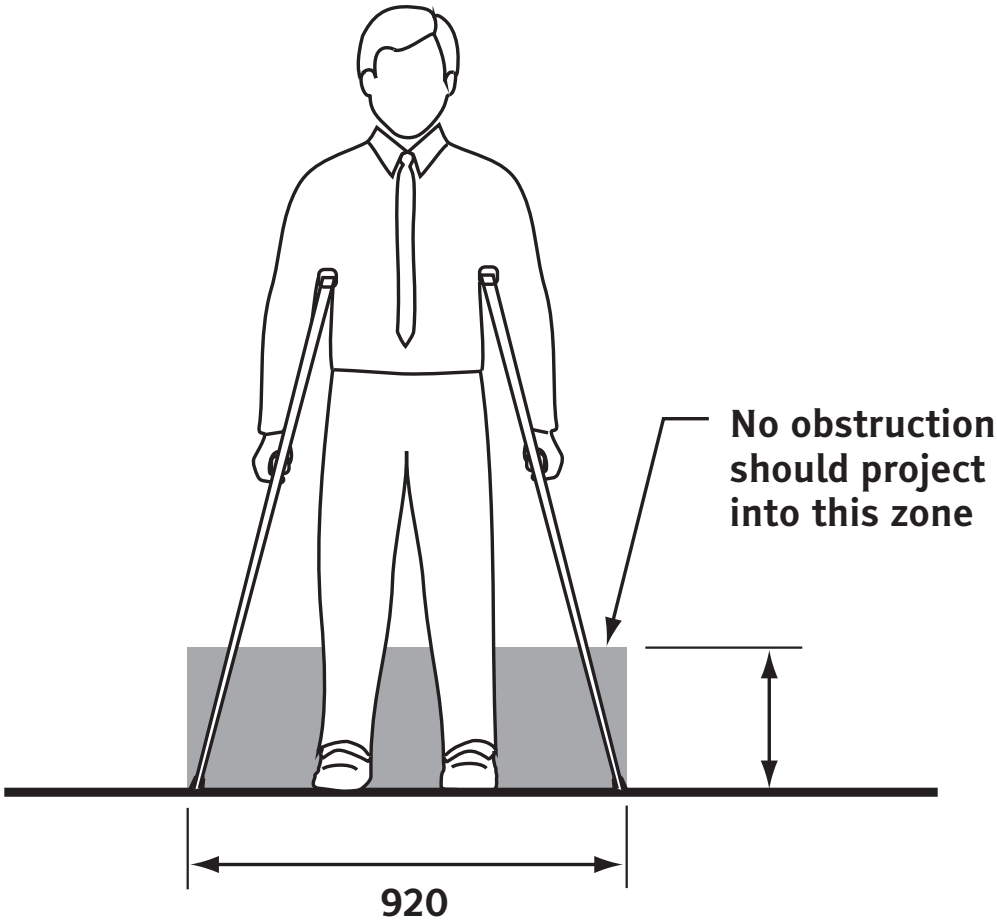

Figure B.5
Walkway width for persons using crutches
(See Clause B.3.)

B.4 Detection space for persons using a long white cane

People who use a long white cane to help them manoeuvre can detect an obstruction within a height range of up to 680 mm from the floor. The forward detection range can vary between 900 and 1500 mm [see Figures B.6(a) and B.6(b)]. However, the detection distance is reduced by the same amount that the obstruction is above the floor.

B.5 Walkway width for a person with a service animal

A person who uses a service animal requires a comfortable clear walkway width of 1200 mm (see Figure B.7).

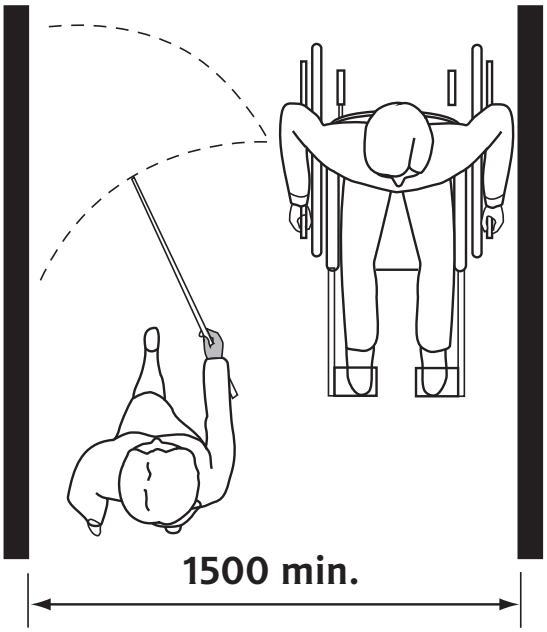

(a)

Figure B.6
Detection space for persons using a long white cane
(See Clause B.4.)

(Continued)

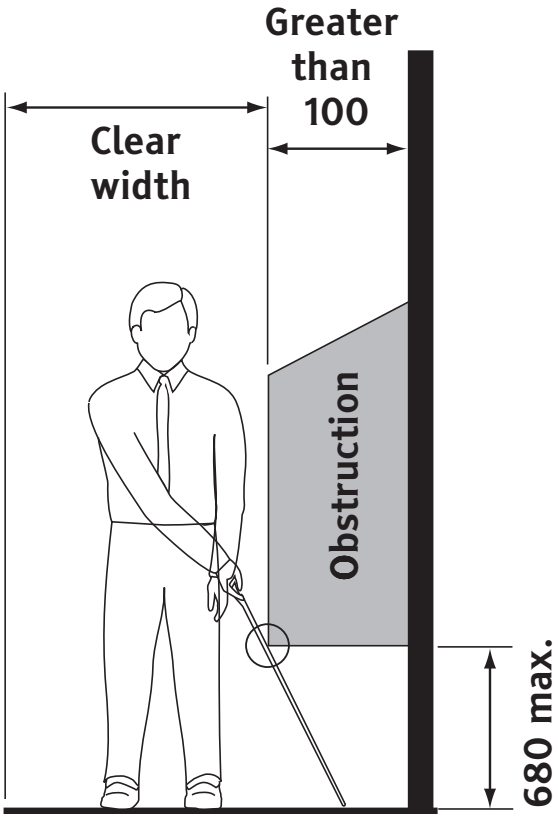

Cane detects obstruction

(b)

Figure B.6 (Concluded)

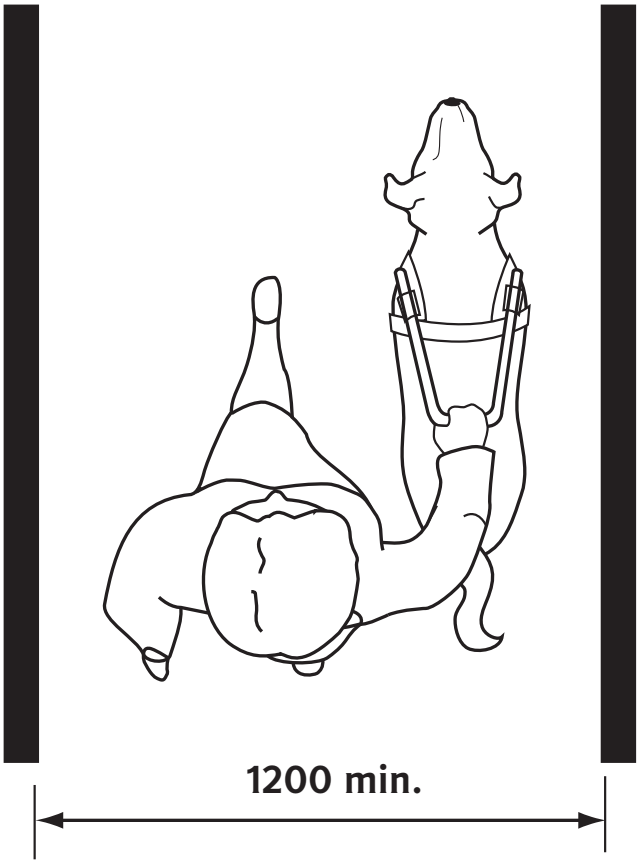

Figure B.7
Walkway width for a person with a service animal
(See Clause B.5.)

B.6 Dimensions for walkers

Figure B.8 shows typical dimensions for a person using a walker. These mobility aids, used especially by elderly persons, are lightweight and fold easily for storage or transport.

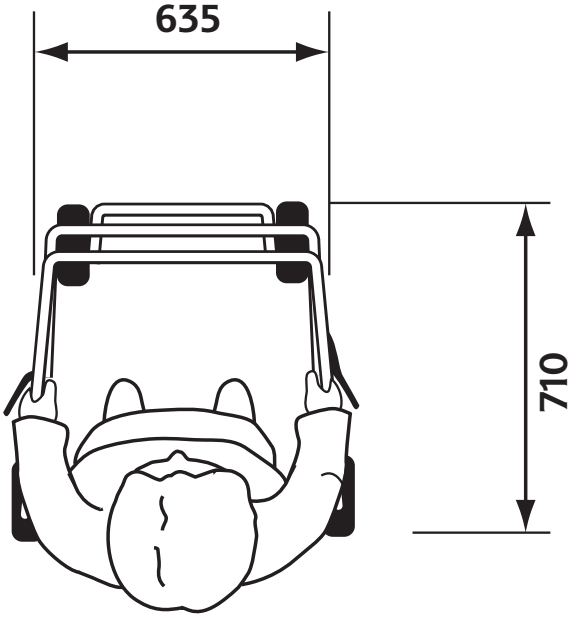

Figure B.8
Floor area for a person using a walker
(See Clause B.6.)

B.7 Dimensions of wheeled manual mobility aids

Typical dimensions for manual wheelchairs are shown in Figures B.9(a) and (b), though sport models tend to have a wider wheelbase. Manual wheelchairs are light in weight and may be folded, either along the long axis [as shown in the Figure B.9(b)] or by removing the wheels and folding the backrest against the seat.

The floor area for a person using a wheelchair, as shown in Figure B.10, includes the additional side space required to accommodate the hand motion that propels a manual wheelchair, as well as the additional toe space that extends beyond the footrest.

B.8 Dimensions of wheeled power mobility aids

The footprints of power wheelchairs currently in use tend to be longer than those of manual wheelchairs (see Figure B.11). Some may have extended footrests or a ventilator at the back of the chair. Power wheelchairs are heavy, carry a battery that requires recharging when stored, and cannot be folded.

Scooters also have a longer footprint, require recharging, are heavy, and cannot be folded. Some people who use wheeled mobility aids own several for different occasions, such as a manual chair for the home and a powered chair for exterior use.

To better accommodate all wheeled mobility aids, a suggested best practice is to use a footprint that is 1500 mm long. This dimension is important, for instance, in the design of platform lifts, which currently tend to be minimal in size and often do not accommodate a longer mobility aid.

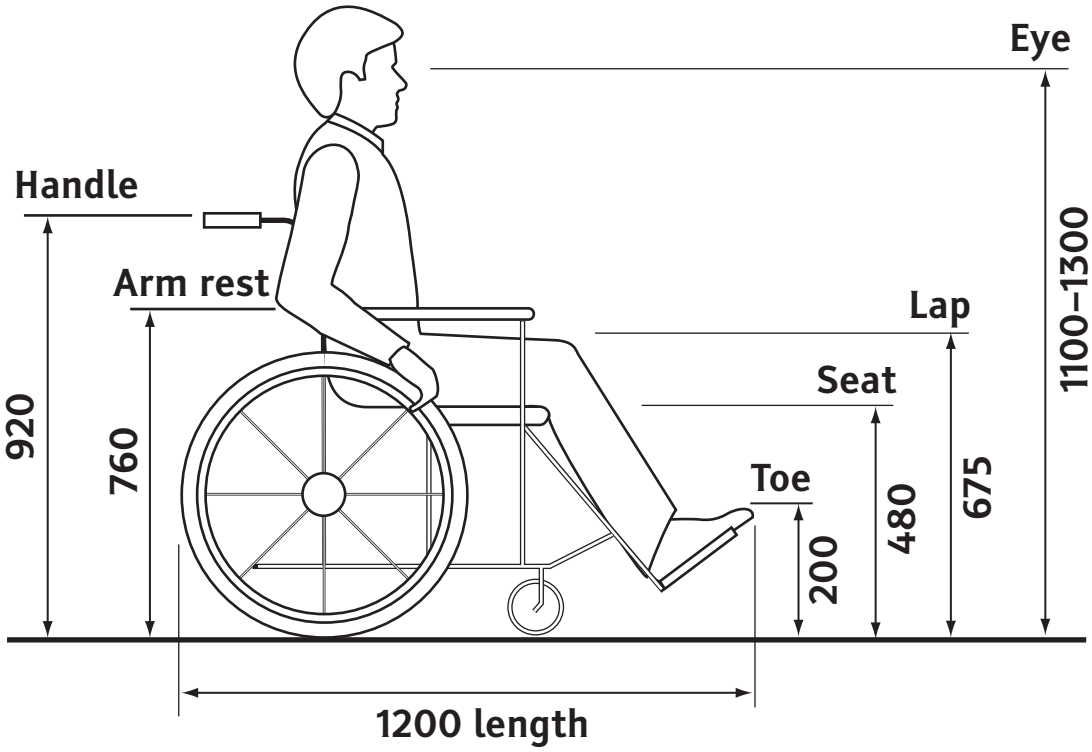

(a)

Figure B.9
Typical dimensions of an adult in a manual wheelchair
(See Clause B.7.)

(Continued)

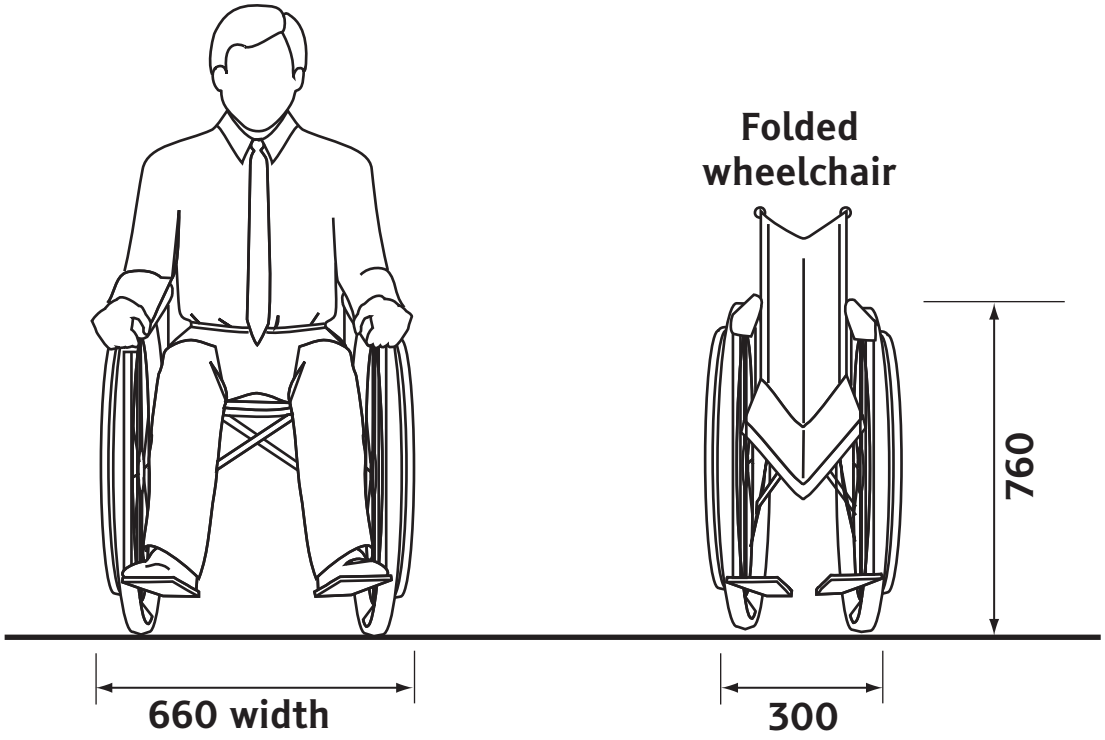

(b)

Figure B.9 (Concluded)

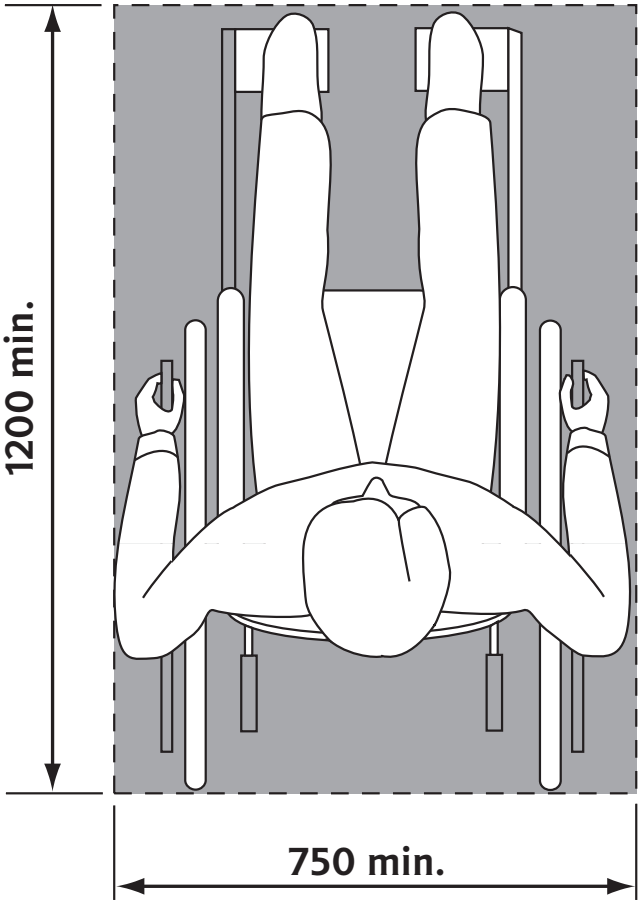

Figure B.10
Minimum floor area for a person using a manual wheelchair
(See Clause B.7.)

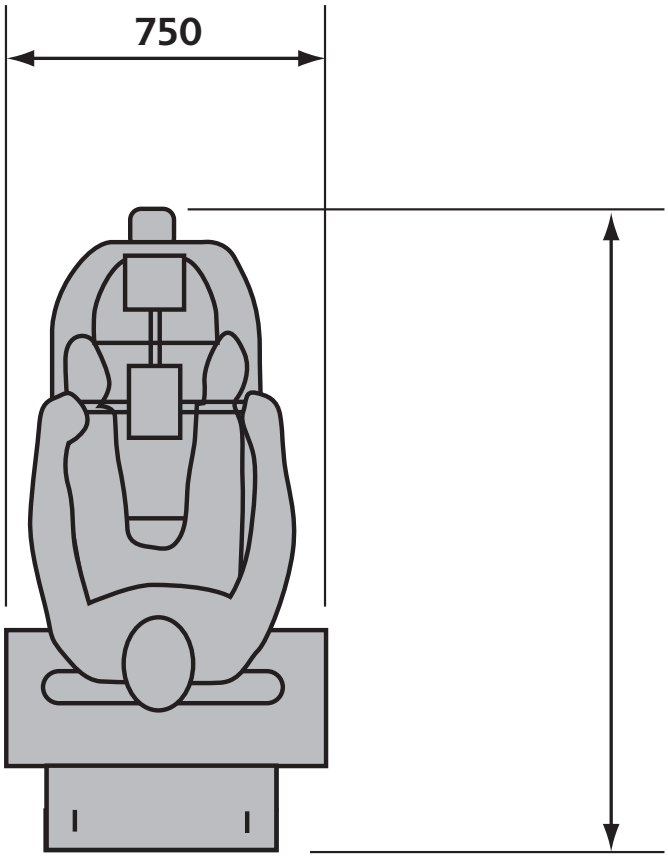

Figure B.11
Floor area for a person using a power wheelchair or scooter
(See Clause B.8.)

B.9 Turning areas

Manual wheelchairs require a turning area as shown in Figure B.12. Power aids, however, often do not have the same manoeuvrability. The turning diameter for a power wheelchair is shown in Figure B.13. Scooters, due to their design, turn differently than wheelchairs and require even more space, as shown in Figure B.14.

The turning space is important for areas such as landings, which must accommodate these wheeled mobility aids. The turning radius for these power aids indicates that the 1500 mm diameter required

for a manual wheelchair is inadequate for manoeuvring in those spaces.

In various instances, equipment or items may be added to the back of a manual wheelchair, power chair, or scooter (such as a ventilator or backpack) that extends the length of the mobility aid footprint. In this situation, the mobility aid might require an extended diameter to complete a 180° or 360° turn.

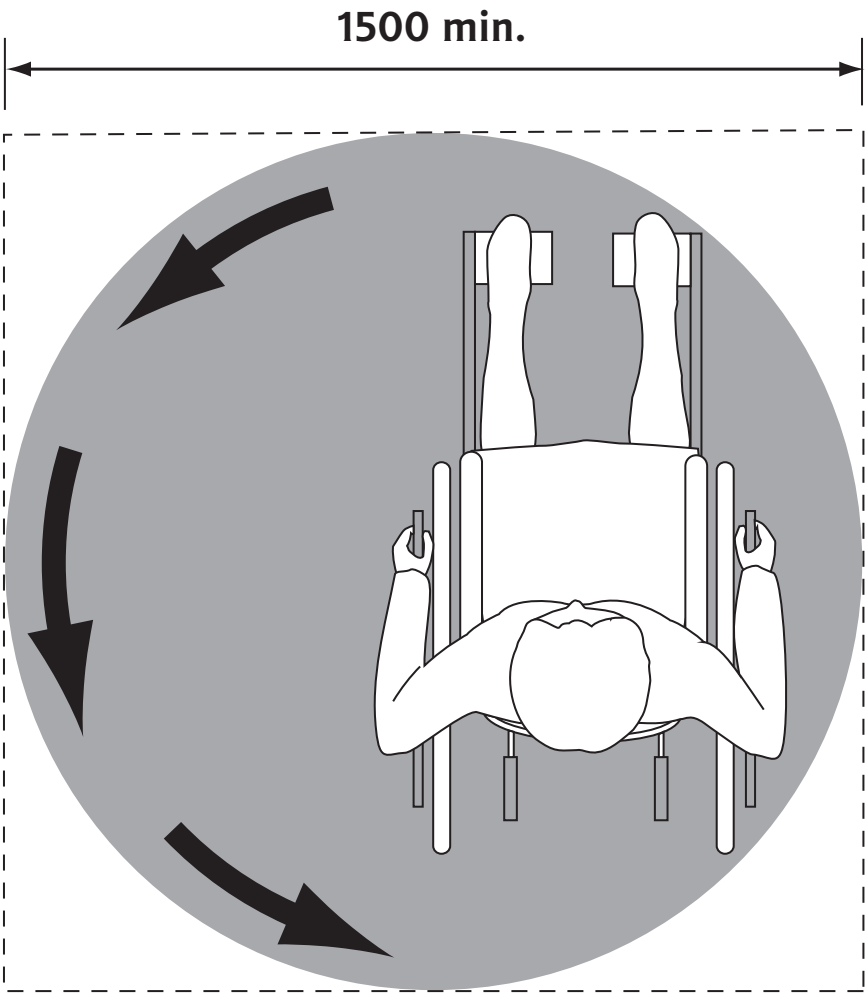

Figure B.12
Turning area for a person using a manual wheelchair
(See Clause B.9.)

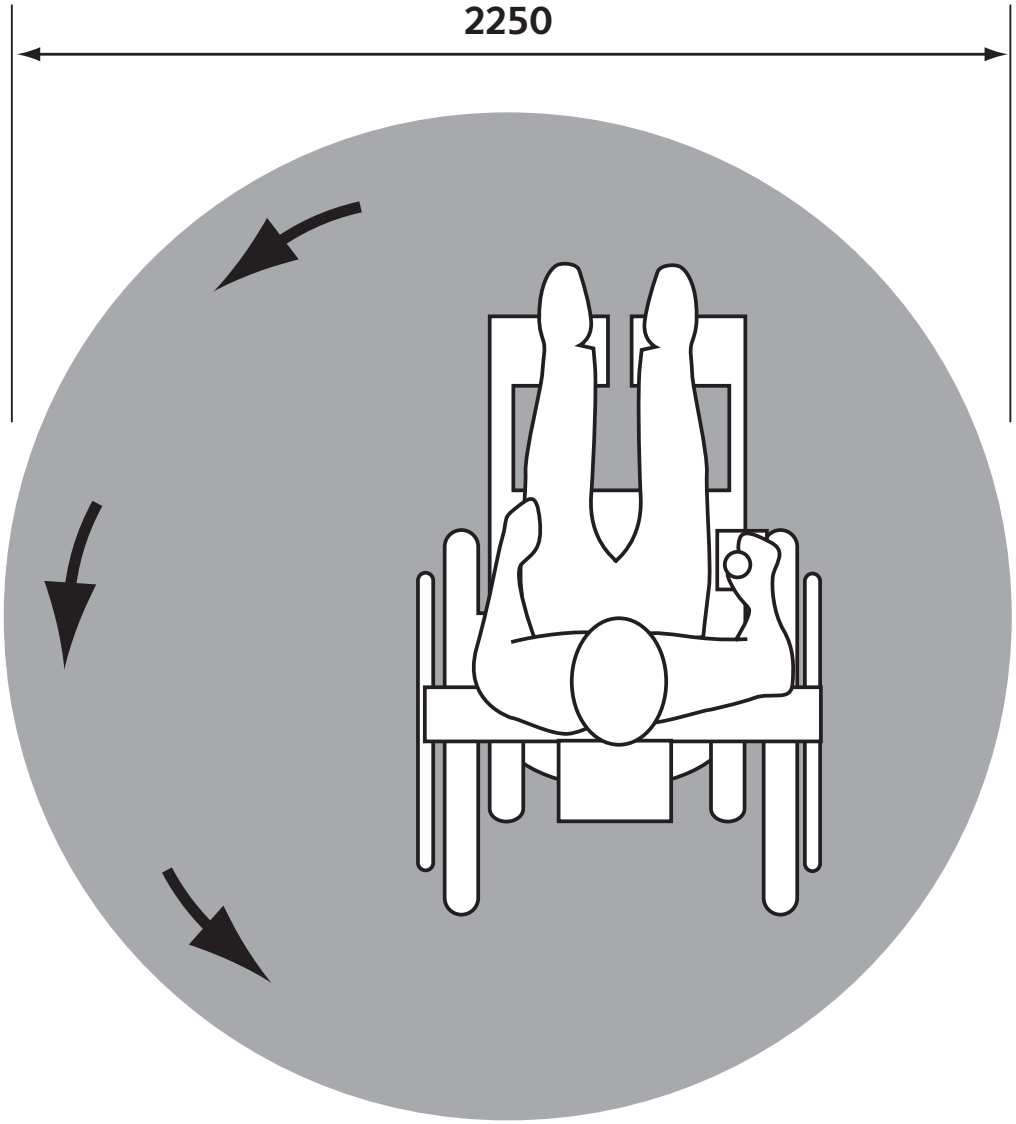

Figure B.13
Turning area for a person using a power wheelchair
(See Clause B.9.)

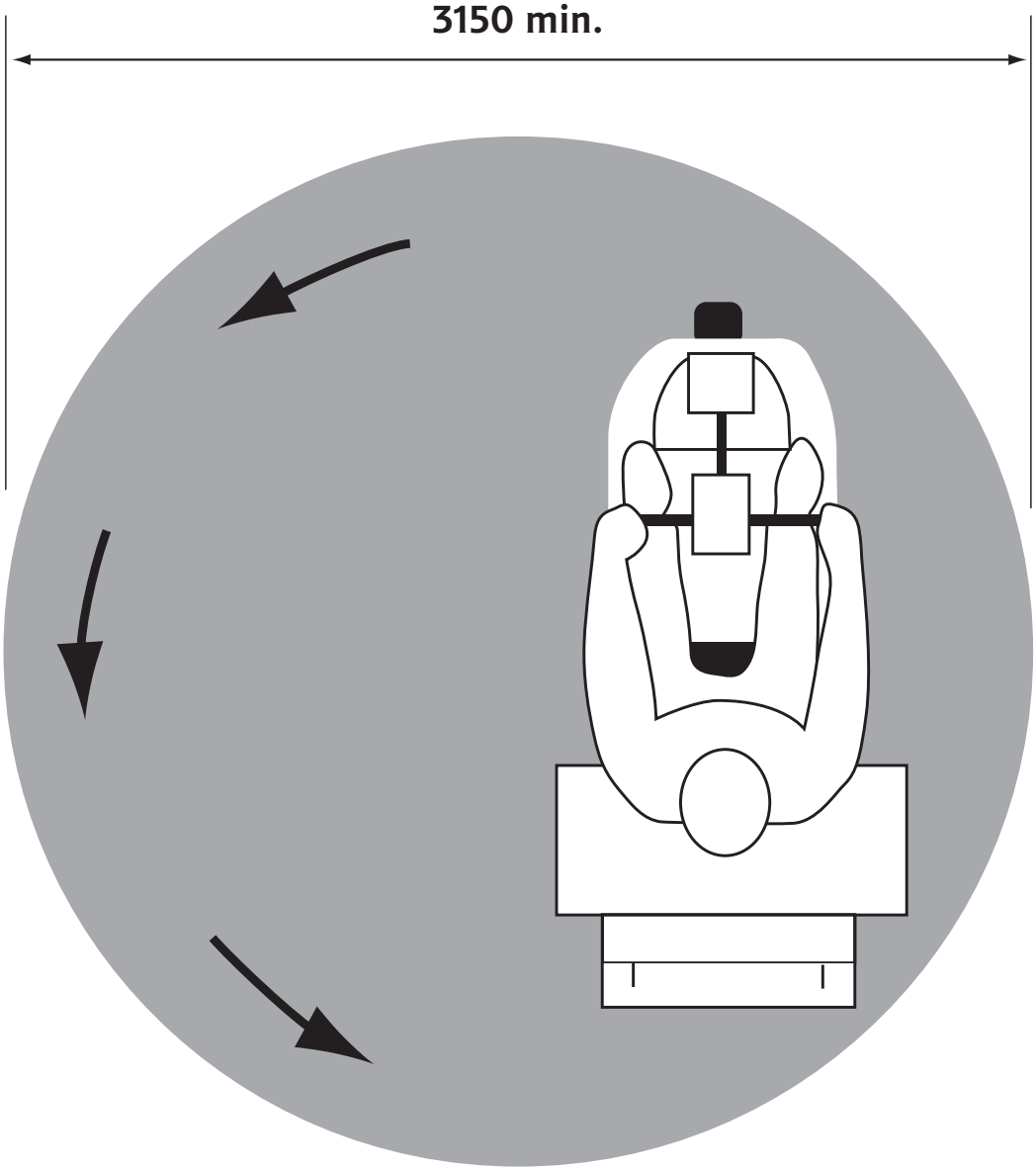

Figure B.14
Turning area for a person using a large scooter
(See Clause B.9.)

B.10 References

Betty Dion Enterprises Ltd. and The Canadian Institute for Barrier-Free Design. **International Best Practices in Universal Design: A Comparative Study**. Prepared for Agriculture and Agri-Food Canada and the Canadian Food Inspection Agency. Ottawa, Ontario: Betty Dion Enterprises Ltd., 2000.

Betty Dion Enterprises Ltd. **International Best Practices in Universal Design: A Global Review.** Ottawa, Ontario: Canadian Human Rights Commission. March 2006.

KRW Incorporated. **Requirements for Power Mobility Aids**. Prepared for the US Architectural and Transportation Barriers Compliance Board, 1995.

Ringaert, L., Rapson, D., Qui, J., Cooper, J., and Shwedyk, E. **Determination of New Dimensions for Universal Design Codes and Standards with Consideration of Powered Wheelchair and Scooter Users**. Winnipeg: Universal Design Institute (Faculty of Architecture, University of Manitoba), 2001.

Steinfeld, E., Maisel, J., and Feathers, D. **Standards and Anthropometry for Wheeled Mobility.** Buffalo, N.Y.: Center for Inclusive Design and Environmental Access (IDEA), School of Architecture and Planning, University of Buffalo, The State University of New York, July 2005.

Annex C (informative)
Potential for slip of floor and tread finishes

Note: This Annex is not a mandatory part of this Standard.

Table C.1
Potential for slip of floor and tread finishes (Source: BSI BS5395 Part 1)

Material	Potential for slip		Remarks
	Dry and unpolished	Wet	
Carpet	Extremely low	Low	Loose or worn carpets can present a trip hazard
Cast iron	Low	Moderate to low	If open treads are used, the potential for slip can be low in wet conditions
Ceramic tiles (glazed or highly polished)	Low	High	—
Ceramic tiles (matte)	Low	Moderate to low	Wet slip potential is dependent on surface roughness. An Rz (din) value greater than 10 μm should be used for clean-water wet areas

(Continued)

Table C.1 (Continued)

Material	Potential for slip		Remarks
	Dry and unpolished	Wet	
Clay pavers	Extremely low	Low	Brick Development Association can advise*
Clay tiles	Low	Moderate to low	When surface is wet and polished, the potential for slip can be very high
Clay tiles (carborundum finish)	Extremely low	Extremely low	Might be suitable for external stairs
Clay tiles (textured)	Extremely low	Low	Might be suitable for external stairs
Concrete	Low	Moderate to low	If textured finish or a non-slip aggregate is used, potential for slip can be low
Concrete (powerfloat finish)	Low	Moderate	Surface dust can cause problems, particularly on new floors
Cork tiles	Extremely low	Low	—

(Continued)

Table C.1 (Continued)

Material	Potential for slip		Remarks
	Dry and unpolished	Wet	
Float glass	Extremely low	High	Various techniques can be used to modify the surface of float glass, thus improving the wet potential for slip. Expert advice should be sought
Granolithic	Low	Moderate to low	Slip-resistant inserts are necessary whenever granolithic is used for stair treads. Polished granolithic should not be used for stair treads
GRP, profiled (chequer plate)	—	Low	Class determined by ramp method, water-wet with shod feet. No dry value determined
Linoleum	Low	Moderate to low	Edges of sheet liable to cause tripping if not fixed firmly to base
Mastic asphalt	Low	Low	—

(Continued)

Table C.1 (Continued)

Material	Potential for slip		Remarks
	Dry and unpolished	Wet	
Profiled ceramics	Low	Moderate to low	Profiled ceramics are suitable for use in barefoot areas. In shod-foot situations, the comment for matte ceramic tiles applies
PVC	Low	High to moderate	Ex-factory classes for PVC should be treated with caution. The installed floor is unlikely to be suitable for use in wet conditions
PVC, enhanced slip resistance	Low	Low	The anti-slip properties depend upon sufficient, uniformly distributed aggregate. Areas of reduced aggregate can present a serious slip hazard
Resin, enhanced slip resistance	Extremely low	Low	The anti-slip properties depend upon sufficient, uniformly distributed aggregate. Areas of reduced aggregate can present a serious slip hazard

(Continued)

Table C.1 (Continued)

Material	Potential for slip		Remarks
	Dry and unpolished	Wet	
Resin, smooth, self-levelling	Extremely low	High to moderate	—
Rubber (sheets or tiles)	Extremely low	High	Not suitable near entrance doors or other foreseeable wet areas
Rubbers, smooth and ribbed	Low	High	—
Stainless steel	Low	High	Wet slip potential is highly dependent on surface finish. Quoted values for 0.5 μm Rz (din) surface roughness
Steel profiled (Diamond plate)	—	Moderate	Class determined by DIN ramp method. No dry value determined
Terrazzo	Low	High to moderate	Slip-resistant inserts are necessary whenever terrazzo is used for stair treads. Polished terrazzo (including resin based) should not be used for stair treads

(Continued)

Table C.1 (Concluded)

Material	Potential for slip		Remarks
	Dry and unpolished	Wet	
Timber (finished)	Extremely low	High	Applies to sealed, varnished, or polished timber
Timber (unfinished)	Low	Moderate	—

*Brick Development Association, Woodside House, Winkfield, Windsor, Berkshire, S1A 2DX, England.

Notes:

(1) The information in this Table has been drawn from the previous edition of this Standard and from more recent research by Great Britain's Health and Safety Executive.

(2) The Table is intended only as a guide. Depending on the precise nature of the wearing surface, seemingly similar products made from the same material can be totally different in terms of their slip-potential characteristics. It is especially important that specifiers are aware that many products will change significantly merely on installation. Wear, usage, contamination, cleaning, and maintenance regimes will all affect the performance of the product over its lifetime.

Commentary:

This Table is included for information and is not comprehensive.

Annex D (informative)
References for residential accommodation

Note: This Annex is not a mandatory part of this Standard.

D.1

The following publications provide detailed information on various design issues for building accessible housing.

Canada Mortgage and Housing Corporation, Socio-economic series 08-011: Understanding the Status of Visitability in Canada. Ottawa: 2008.

-------, 63909: Design Options for Barrier-free and Adaptable Housing. Ottawa: 1996.

-------, 65023: Accessible Housing by Design — Ramps. Ottawa: 2006.

-------, 65686: Accessible Housing by Design — Bathrooms. Ottawa: 2007.

-------, 65588: Accessible Housing by Design — Kitchens. Ottawa: 2007.

-------, 65080: Accessible Housing by Design — Appliances. Ottawa: 2006.

-------, 65542: Accessible Housing by Design — Lifts and Residential Elevators. Ottawa: 2007.

-------, 65544: Accessible Housing by Design — Residential Hoists and Ceiling Lifts. Ottawa: 2007.

-------, Accessible Housing by Design — Home Automation. Ottawa: 2008.

-------, 60945: FlexHousing™ — Homes that Adapt to Life's Changes. Ottawa: 1999.

–––, 61943: FlexHousing™ — Pocket Planner. Ottawa: [No date].

–––, 61105: Safe at Home: A Guide to Personal Response Services. Ottawa: 1995.

–––, NHA 5467: Housing for Persons with Disabilities. Ottawa: 1996.

–––, PE0184: Home Technology to Support Independent Living. Ottawa: 1996.

Manitoba Housing and Renewal Corporation: Visitable Housing — Community Building Through Visitable and Adaptable Housing. Winnipeg: 2006.

Δ Annex E (normative) Elevator requirements for persons with physical disabilities

Notes:
(1) This Annex is a mandatory part of this Standard.
(2) The following text is a reproduction of Appendix E of ASME A17.1-2013/CSA B44-13.

Introduction

This Appendix was developed and approved by the CSA B44 Technical Committee. The ASME A17 Standards Committee, in the spirit of harmonization, authorized the publication of this Appendix.

This Appendix is not a mandatory part of this Code; however, it is provided for reference in order to comply with the requirements of the NBBC.

E.1 Scope

This Appendix contains requirements intended to make passenger elevators usable by persons with physical disabilities in jurisdictions enforcing NBCC. These requirements are in addition to, or modifications of, certain requirements specified elsewhere in this Standard. Elevators shall be passenger elevators as classified by ASME A17.1/CSA B44. Elevator operation shall be automatic.

E.2 Definitions

Destination-oriented elevator system — an elevator system that provides lobby controls for the selection of destination floors, lobby indicators designating which elevator to board, and a car indicator designating the floors at which the car will stop.

Elevator car call sequential step scanning — a technologyor used to enter a car call by means of an up or down floor selection button.

Physical disability — a disability resulting in a mobility or sensory impairment.

Variable message signs (VMS) — electronic signs that have a message with the capacity to change by means of scrolling, streaming, or paging across a background.

Variable message sign (VMS) characters — characters of an electronic sign composed of pixels in an array.

E.3 Leveling

Each car shall automatically stop and maintain position at floor landings within a tolerance of 13 mm (1/2 in.) under rated loading to zero loading conditions.

E.4 Door operation

Power-operated horizontally sliding car and landing doors opened and closed by automatic means shall be provided.

E.5 Door size

The clear width of elevator doors shall comply with Table E.1.

E.6 Door protective and reopening device

E.6.1

Doors shall be provided with a door-reopening device that automatically stops and reopens the car door and landing door if the door becomes obstructed by an object or person. This reopening device shall also be capable of sensing an object or person in the path of a closing door at 125 mm ± 25 mm (5 in. ± 1 in.) and 735 mm ± 25 mm (29 in. ± 1 in.) above the floor without requiring contact for activation, although contact may occur before the door reverses.

E.6.2
Door-reopening devices shall remain effective for a period of not less than 20 s.

E.7 Door timing for hall and car calls

E.7.1
The minimum acceptable time from notification that a car is answering a call until the doors of that car start to close shall be calculated from the following equation, but shall not be less than 5 s:

$$T = D/(455\ \text{mm/s})$$

or

$$T = D/(1.5\ \text{ft/s})$$

where T equals the total time in seconds and D equals the distance (in mm or ft) from the point in the lobby or corridor 1 525 mm (60 in.) directly in front of the farthest call button controlling that car to the centerline of its hoistway door.

E.7.2
For cars with in-car lanterns, T shall begin when the signal is visible from the point 1 525 mm (60 in.) directly in front of the farthest hall call button and the audible signal is sounded.

E.7.3
Elevator doors shall remain fully open in response to a car call for 3 s minimum.

E.8 Inside dimensions of elevator cars

E.8.1
The inside dimensions of elevator cars shall comply with Table E.1.

Figure E.1
Minimum dimensions of elevator cars

Door location	Door clear width, mm	Inside car, side to side, mm	Inside car, back wall to front return, mm	Inside car, wall to inside face of door, mm
Centred	1 065	2 030	1 295	1 370
Side (off-centre)	915[2]	1 725	1 295	1 370
Any	915[2]	1 370	2 030	2 030
Any	915[2]	1 525	1 525	1 525

Notes:

(a) Table E.1 is based on Table 407.2.8 and 407.4.1 in ANSI/ICC A117.1, metric values only.

(b) A tolerance of –16 mm shall be permitted.

E.8.2
Other car configurations that provide a 915 mm (36 in.) minimum clear door width and a circular space with a minimum diameter of 1 525 mm (60 in.) with the door closed are permitted.

E.9 Car controls

E.9.1 Features
Car controls shall have the features as specified in Clauses E.9.2 to E.9.7.

E.9.2 Height
Buttons with floor designations shall be located a maximum of 1 220 mm (48 in.) above the floor or ground measured to the centerline of the buttons. Emergency control buttons, including emergency alarms where provided, shall be grouped at the bottom of the panel. Emergency control buttons shall have their centerlines 890 mm (35 in.) minimum above the floor or ground.

E.9.3 Buttons

E.9.3.1 Button dimensions

Buttons shall be 19 mm (0.75 in.) minimum in their smallest dimension. Buttons or surrounding button collars shall be raised a minimum of 1.5 mm (0.06 in.).

E.9.3.2 Button arrangement

Buttons shall be arranged with numbers in ascending order. Floors shall be designated . . . -4, -3, -2, -1, 0, 1, 2, 3, 4, etc., with floors below the main entry floor designated with minus numbers. Numbers shall be permitted to be omitted, provided the remaining numbers are in sequence. Where a telephone keypad arrangement is used, the number key (#) shall be utilized to enter the minus symbol ("–"). When two or more columns of buttons are provided, they shall read from left to right.

E.9.3.2.1

Where existing building floor designations differ from the arrangement required by Clause E.9.3.2 or are alphanumeric, a new operating panel shall be permitted to use such existing building floor designations.

E.9.3.3 Button characteristics

E.9.3.3.1

Control buttons shall be identified by raised characters and Braille complying with Clause E.20.

E.9.3.3.2

Raised character and Braille designations shall be placed immediately to the left of the button to which the designations apply. When a negative number is used to indicate a negative floor, the Braille designation shall be a cell with the dots 3 and 6 followed by the ordinal number.

E.9.3.4 Control button

The control button for the main entry floor, and control buttons other than remaining buttons with floor designations, shall be identified with raised symbols and Braille as shown in Table 2.26.12.1.

The location and size of Braille, where required, shall comply with Table 2.26.12.1.

E.9.3.5 Visible indicators

Buttons with floor designations shall be provided with visible indicators to show that a call has been registered. The visible indication shall extinguish when the car arrives at the designated floor.

E.9.3.6 Elevator car call sequential step scanning

Elevator car call sequential step scanning shall be provided where car control buttons are provided more than 1 220 mm (48 in.) above the floor. Floor selection shall be accomplished by applying momentary or constant pressure to the up or down scan button. The up scan button shall sequentially select floors above the current floor. The down scan button shall sequentially select floors below the current floor. When pressure is removed from the up or down scan button for more than 2 s, the last floor selected shall be registered as a car call. The up and down scan button shall be located adjacent to or immediately above the emergency control buttons.

E.9.4 Telephone-style keypads

Telephone-style keypads shall be in a standard telephone keypad arrangement. Call buttons shall be 19 mm (0.75 in.) minimum in their smallest dimension. Buttons shall be raised a minimum of 1.5 mm (0.06 in.). Braille shall not be required. Characters shall be 13 mm (0.5 in.) minimum in height and otherwise conform to Clause E.20.4. The number five key shall have a single raised dot. The dot shall be 3.00 mm to 3.05 mm (0.118 in. to 0.12 in.) base diameter and in other aspects conform to Table E.20.4. Characters shall be centred on the corresponding keypad button. A display shall be provided in the car with visible indicators to show registered car destinations. The visible indication shall extinguish when the call has been answered. A standard five-pointed star shall be used to indicate the main entry floor.

E.10 Car position indicators

E.10.1 General

In elevator cars, both audible and visible car floor location indicators shall be provided to identify the floor location of the car.

E.10.2 Visible indicators

Indicators shall be located above the car control panel or above the door. Numerals shall be 16 mm (0.63 in.) minimum in height.

E.10.2.1 Floor arrival

To indicate a car passing a floor and when a car stops at a floor, served by the elevator, the corresponding character shall illuminate.

E.10.3 Audible indicators

E.10.3.1

The audible signal shall be 10 dBA minimum above ambient, but shall not exceed 80 dBA maximum, measured at the annunciator. The signal shall be an automatic verbal announcement that announces the floor at which the car is about to stop. The verbal announcement indicating the floor shall be completed prior to the initiation of the door opening. The verbal annunciator shall have a frequency of 300 Hz minimum and 3,000 Hz maximum.

E.10.3.2

For elevators, other than destination-oriented elevators, that have a rated speed of 1 m/s (200 ft/min) or less, where the verbal annunciator is not provided, an audible signal with a frequency of 1 500 Hz maximum that sounds as the car passes or stops at a floor served by the elevator shall be permitted.

E.11 Emergency communications

E.11.1 General

Emergency two-way communication systems between the elevator car and a point outside the hoistway shall comply with 2.27.1. The operable parts of a two-way communication system shall be located between 380 mm (1.5 in.) and 1 220 mm (48 in.) from the floor.

E.11.2 Instructions

Operating instructions required by 2.27.1 shall be presented in both tactile and visual form.

E.12 Floor surfaces

Floor surfaces in elevator cars shall have a firm, stable, and slip-resistant surface that permits easy movement of wheelchairs. Carpet pile height shall be 13 mm (0.5 in.) maximum.

E.13 Handrails

Handrails shall be provided on all nonaccess walls. The top of the gripping surfaces of the handrails shall be at a height of 800 mm to 920 mm (31.5 in. to 36.2 in.), with a space of 35 mm to 45 mm (1.4 in. to 1.8 in.) between the handrails and wall.

E.14 Illumination levels

The level of illumination at the car controls shall be 100 lx (10 fc) minimum.

E.15 Hall buttons

E.15.1

Hall buttons and keypad buttons in elevator lobbies and halls shall be located vertically between 890 mm (35 in.) and 1 220 mm (48 in.) above the floor, measured to the centerline of the respective button.

E.15.2

A clear floor space of 760 mm (30 in.) minimum by 1 220 mm (48 in.) minimum shall be provided at hall buttons and keypads.

E.15.3
Hall buttons shall be 19 mm (0.75 in.) minimum in the smallest dimension.

E.15.4
Hall buttons shall have visual signals to indicate when each call is registered and when each call is answered. Call buttons shall provide an audible signal or mechanical motion of the button to indicate when each call is registered.

E.15.5
The hall button that designates the UP direction shall be located above the button that designates the DOWN direction. Buttons or surrounding button collars shall be raised a minimum of 1.5 mm (0.06 in.). Objects located beneath hall buttons shall protrude 25 mm (1 in.) maximum.

E.15.6 Keypads
Where keypads are provided they shall comply with Clause E.9.4.

E.16 Hall or In-car signals

E.16.1 General
A visible and audible signal shall be provided at each hoistway entrance to indicate which car is answering a call and its direction of travel, except that signals in cars, visible from the floor area adjacent to the hall call buttons, and complying with requirements of Clauses E.16.2 and E.16.3, shall be permitted.

E.16.2 Audible signals
Audible signals shall sound once for the UP direction and twice for the DOWN direction, or shall have verbal annunciators that state the word UP or DOWN. Audible signals shall have a frequency of 1 500 Hz maximum. Verbal annunciators shall have a frequency of 300 Hz minimum and 3 000 Hz maximum. The audible signal or verbal annunciator shall be 10 dBA minimum above ambient, but shall not exceed 80 dBA maximum, measured at the hall call button.

E.16.3 Visible signals

E.16.3.1 Height

Hall signal fixtures shall be 1 830 mm (72 in.) minimum above the floor or ground, measured to the centerline of the fixture.

E.16.3.2 Size

The visible signal elements shall be 60 mm (2.36 in.) minimum between the uppermost and lowest edges of the illuminated shape measured vertically.

E.16.3.3 Visibility

Signals shall be visible from the floor area adjacent to the hall button.

E.17 Floor/Car designations

Raised character and Braille floor designations shall be provided on both jambs of elevator hoistway entrances and shall be centred at 1 525 mm (60 in.) above the floor, measured from the baseline of the characters. A raised star placed immediately to the left of the floor designation shall also be provided on both jambs at the main entry level. Such characters shall be 50 mm (2 in.) high and shall comply with Clause E.20.2 and E.20.3.

E.18 Destination-oriented elevators

E.18.1 General

Note: Destination-oriented elevators shall comply with Clauses E.3 to E.8, E.11, E.12, E.14, E.17, and E.18.2 to E.18.6.

E.18.2 Call buttons

Call buttons shall be 890 mm minimum and 1 220 mm maximum (35 in. minimum and 48 in. maximum) above the floor or ground, measured to the centerline of the buttons. A clear floor or ground space of 760 mm x 1 220 mm (30 in. x 48 in.) shall be provided. Call buttons shall be 19 mm (0.75 in.) minimum in their smallest dimension. Buttons shall be raised a minimum of 1.5 mm (0.06 in.). Objects beneath hall call buttons shall protrude 25 mm (1 in.)

maximum into the clear floor or ground space. Destination-oriented elevator systems shall have a keypad or other means for the entry of destination information. Keypads, if provided, shall be in a standard telephone keypad arrangement, and buttons shall be identified by visual characters complying with Clause E.20.2. Characters shall be centered on the corresponding keypad button. The number five key shall have a single raised dot. The dot shall be 3.00 mm to 3.05 mm (0.118 in. to 0.12 in.) base diameter, and in other aspects comply with Table E.20.4. Destination-oriented elevator systems shall be provided with a visual signal and audible tones and verbal announcements to indicate which car is responding to a call. The audible tones and verbal announcements shall be activated by pressing a function button. The function button shall be identified by the international symbol for accessibility and a raised indication (see Fig. E.20.6.3). The symbol shall be 16 mm (0.63 in.) in height and be a visual character complying with Clause E.20.2. The indication shall be three raised dots, spaced 6 mm (0.25 in.) at base diameter, in the form of an equilateral triangle. The function button shall be located immediately below the keypad arrangement or floor buttons. A display shall be provided in the car with visible indicators to show registered car destinations.

E.18.3 Hall signals

E.18.3.1 General

Destination-oriented elevators shall be provided with a visible signal and audible tones and verbal announcements to indicate which car is responding to a call. The signals shall be the same as those given at the call button or call button keypad, if provided. Each elevator in a bank shall have audible and visible means for differentiation.

E.18.3.2 Visible signals

E.18.3.2.1 Height

Hall signal fixtures shall be 1 830 mm (72 in.) minimum above the floor or ground, measured to the centerline of the fixture.

E.18.3.2.2
The visible signal elements shall be 60 mm (2.36 in.) minimum in their smallest dimension.

E.18.3.2.3 Visibility
Signals shall be visible from the floor area adjacent to the hoistway entrance.

E.18.4 Car controls
Emergency controls, including emergency alarms where provided, shall have centerlines that are 890 mm minimum and 1 220 mm maximum (35 in. minimum and 48 in. maximum) above the floor or ground. Buttons shall be 19 mm (0.75 in.) minimum in their smallest dimension. Buttons shall be raised a minimum of 1.5 mm (0.06 in.).

E.18.5 Car Position indicators

E.18.5.1 General
In elevator cars, audible and visible car location indicators shall be provided.

E.18.5.2 Visible indicators
A display shall be provided in the car with visible indicators to show car destinations. Numerals shall be 16 mm (0.63 in.) high minimum. The visible indicators shall extinguish when the car arrives at the designated floor.

E.18.5.3 Audible indicators
An automatic verbal announcement that announces the floor at which the car is about to stop shall be provided. The announcement shall be 10 dBA minimum above ambient and 80 dBA maximum, measured at the annunciator. The verbal announcement indicating the floor shall be completed prior to the initiation of the door opening. The verbal annunciator shall have a frequency of 300 Hz minimum and 3,000 Hz maximum.

E.18.6 Elevator car identification

In addition to the tactile signs required by Clause E.17, a raised elevator car identification shall be placed immediately below the hoistway entrance floor designation. The characters shall be 50 mm (2 in.) high and shall comply with Clauses E.20.2 and E.20.3.

E.18.7 Destination-oriented elevators

Destination-oriented elevators shall not be required to comply with Clause E.7.1.

E.19 Limited-use/Limited-application elevators

Limited-use/limited-application elevators shall comply with Clauses E.1, E.3, E.5 through E.17, and E.19.

E.19.1 Elevator door requirements

Elevator hoistway doors shall comply with Clause E.19.1.

E.19.1.1 Sliding Doors

Sliding hoistway doors shall comply with Clause E.4.

E.19.1.2 Swinging doors

Swinging hoistway doors shall open and close automatically and shall comply with Clause E.19.1.2. The clear floor space for hall call buttons shall be located beyond the arc of the door swing.

E.19.1.2.1 Power operation

Swinging doors shall be power-operated and shall comply with ANSI/BHMA A156.19.

E.19.1.2.2 Duration

Power-operated swinging doors shall remain open for 20 s minimum when activated

E.19.1.3 Door location and width

Car doors shall comply with Clause E.19.1.3.

E.19.1.3.1 Cars with single door or doors on opposite ends

Car doors shall be positioned at the narrow end of cars with a single door and on cars with doors on opposite ends. Doors shall provide a clear opening width of 815 mm (32 in.) minimum.

E.19.1.3.2 Cars with doors on adjacent sides

E.19.1.3.2.1

Car doors shall be permitted to be located on adjacent sides of cars that provide a 1.67 m^2 (18 ft^2) platform. Doors located on the narrow end of cars shall provide a clear opening width of 915 mm (36 in.) minimum. Doors located on the long side shall provide a clear opening width of 1 065 mm (42 in.) minimum and be located as far as practicable from the door on the narrow end.

E.19.1.3.2.2

Car doors that provide a clear opening width of 915 mm (36 in.) minimum shall be permitted to be located on adjacent sides of cars that provide a clear floor area of 1 295 mm (51 in.) width and 1 295 mm (51 in.) in depth.

E.19.2 Elevator car requirements

Elevator cars shall comply with Clause E.19.2.

E.19.2.1 Inside dimensions

Elevator cars shall provide a clear floor width of 1 065 mm (42 in.) minimum. The clear floor area shall not be less than 1.46 m^2 (15.75 ft^2).

E.19.3

Elevator Car Controls, Control panels shall be centered on the longest side wall.

E.20 Signs

E.20.1
Accessible signs shall comply with Clause E.20.2. Tactile signs shall contain both raised characters and Braille. Where signs with both visual and raised characters are required, either one sign with both visual and raised characters, or two separate signs, one with visual, and one with raised characters, shall be provided.

E.20.2 Visual characters

E.20.2.1 General

E.20.2.1.1
Visual characters shall comply with either of the following:
(a) Visual characters that also serve as raised characters shall comply with Clause E.20.3.
(b) Visual characters on Variable Message Signs (VMS) signage shall comply with Clause E.20.7.
(c) Visual characters not covered in (a) and (b) above shall comply with Clause E.20.2.

E.20.2.1.2
The visual and raised requirements of E.20.2.1.1(a) shall be permitted to be provided by two separate signs that provide corresponding information provided one sign complies with Clause E.20.2 and the second sign copmplies with Clause E.20.3.

E.20.2.2 Case
Characters shall be uppercase, lowercase, or a combination of both.

E.20.2.3 Style
Characters shall be conventional in form. Characters shall not be italic, oblique, script, highly decorative, or of other unusual form.

E.20.2.4 Character height
The uppercase letter "I" shall be used to determine the allowable height of all characters of a font. The uppercase letter "I" of the font shall have a minimum height of 16 mm (0.63 in.), plus 3 mm

(0.118 in.) per 305 mm (1 ft) of viewing distance above 1 830 mm (6 ft). Viewing distance shall be measured as the horizontal distance between the character and an obstruction preventing further approach towards the sign.

E.20.2.5 Character width

The uppercase letter "O" shall be used to determine the allowable width of all characters of a font. The width of the uppercase letter "O" shall be 55% minimum and 110% maximum of the height of the uppercase letter "I" of the font.

E.20.2.6 Stroke width

The uppercase letter "I" shall be used to determine the allowable stroke width of all characters of a font. The stroke width shall be 10% minimum and 30% maximum of the height of the uppercase "I" of the font.

E.20.2.7 Character spacing

Spacing shall be measured between the two closest points of adjacent characters within a message, excluding word spaces. Spacing between individual characters shall be 10% minimum and 35% maximum of the character height.

E.20.2.8 Line spacing

Spacing between the baselines of separate lines of characters within a message shall be 135% minimum to 170% maximum of the character height.

E.20.2.9 Finish and contrast

Characters and their background shall have a non-glare finish. Characters shall contrast with their background, with either light characters on a dark background, or dark characters on a light background.

E.20.3 Raised characters

E.20.3.1

Raised characters shall comply with Clause E.20.3, and shall be duplicated in Braille complying with Clause E.20.4.

E.20.3.2 Depth
Raised characters shall be raised a minimum of 0.8 mm (0.03 in.) above their background.

E.20.3.3 Case
Characters shall be uppercase.

E.20.3.4 Style
Characters shall be sans serif. Characters shall not be italic, oblique, script, highly decorative, or of other unusual form.

E.20.3.5 Character height

E.20.3.5.1
The uppercase letter "I" shall be used to determine the allowable height of all characters of a font. The uppercase letter "I" of the font, measured vertically from the baseline of the character, shall be 16 mm (0.63 in.) minimum, and 50 mm (2 in.) maximum.

E.20.3.5.2
Where separate raised and visual characters with the same information are provided, the height of the raised uppercase letter "I" shall be permitted to be 13 mm (0.5 in.) minimum.

E.20.3.6 Character width
The uppercase letter "O" shall be used to determine the allowable width of all characters of a font. The width of the uppercase letter "O" of the font shall be 55% minimum and 110% maximum of the height of the uppercase letter "I" of the font.

E.20.3.7 Stroke width
Raised character stroke width shall comply with Clause E.20.3.7. The uppercase letter "I" of the font shall be used to determine the allowable stroke width of all characters of a font.

E.20.3.7.1 Maximum
The stroke width shall be 15% maximum of the height of the uppercase letter "I" measured at the top surface of the character.

E.20.3.7.2 Minimum

When characters are both visual and raised, the stroke width shall be 10% minimum of the height of the uppercase letter "I."

E.20.3.8 Character spacing

Character spacing shall be measured between the two closest points of adjacent raised characters within a message, excluding word spaces. Spaces between individual characters shall be 3 mm (0.118 in.) minimum measured at the top surface of the characters, 1.6 mm (0.63 in.) minimum measured at the base of the characters, and four times the raised character stroke width maximum. Characters shall be separated from raised borders and decorative elements 10 mm (0.4 in.) minimum.

E.20.3.9 Line spacing

Spacing between the baselines of separate lines of raised characters within a message shall be 135% minimum and 170% maximum of the raised character height.

E.20.3.10 Location

Where a sign containing raised characters and Braille is provided at double doors with one active leaf, the sign shall be located on the inactive leaf. Where a sign containing raised characters and Braille is provided at double doors with two active leaves, the sign shall be to the right of the right-hand door. Where there is no wall space on the latch side of a single door, or to the right side of double doors, signs shall be on the nearest adjacent wall. Signs containing raised characters and Braille shall be located so that a clear floor area 455 mm (18 in.) minimum by 455 mm (18 in.) minimum, centered on the raised characters, is provided beyond the arc of any door swing between the closed position and 45 deg open position.

E.20.3.11 Finish and contrast

E.20.3.11.1

Characters and their background shall have a non-glare finish. Characters shall contrast with their background with either light characters on a dark background or dark characters on a light background.

E.20.3.11.2
Where separate raised characters and visual characters with the same information are provided, raised characters are not required to have non-glare finish or to contrast with their background.

E.20.4 Braille

E.20.4.1 General
Braille shall be contracted (Grade 2) Braille and shall comply with Clause E.20.4.

E.20.4.2 Uppercase letters
The indication of an uppercase letter or letters shall only be used before the first word of sentences, proper nouns and names, individual letters of the alphabet, initials, and acronyms.

E.20.4.3 Dimensions
Braille dots shall have a domed or rounded shape and shall comply with Table E.20.4. See also Fig. E.20.4.

Table E.20.4
Measurement range for standard sign Braille
(See Clauses E.8.5, E.17.2, and E.19.5.1.)

Measurement range for	Minimum, mm	Maximum, mm
Dot base diameter	1.5	1.5
Distance between any two dots in same cell, centre to centre	2.3	2.5
Distance between corresponding dots in adjacent cells, centre to centre	6.1	7.6
Dot height	0.6	0.9
Distance between corresponding dots from one cell to the cell directly below, centre to centre	10.0	10.1

Figure E.20.4
Braille measurements

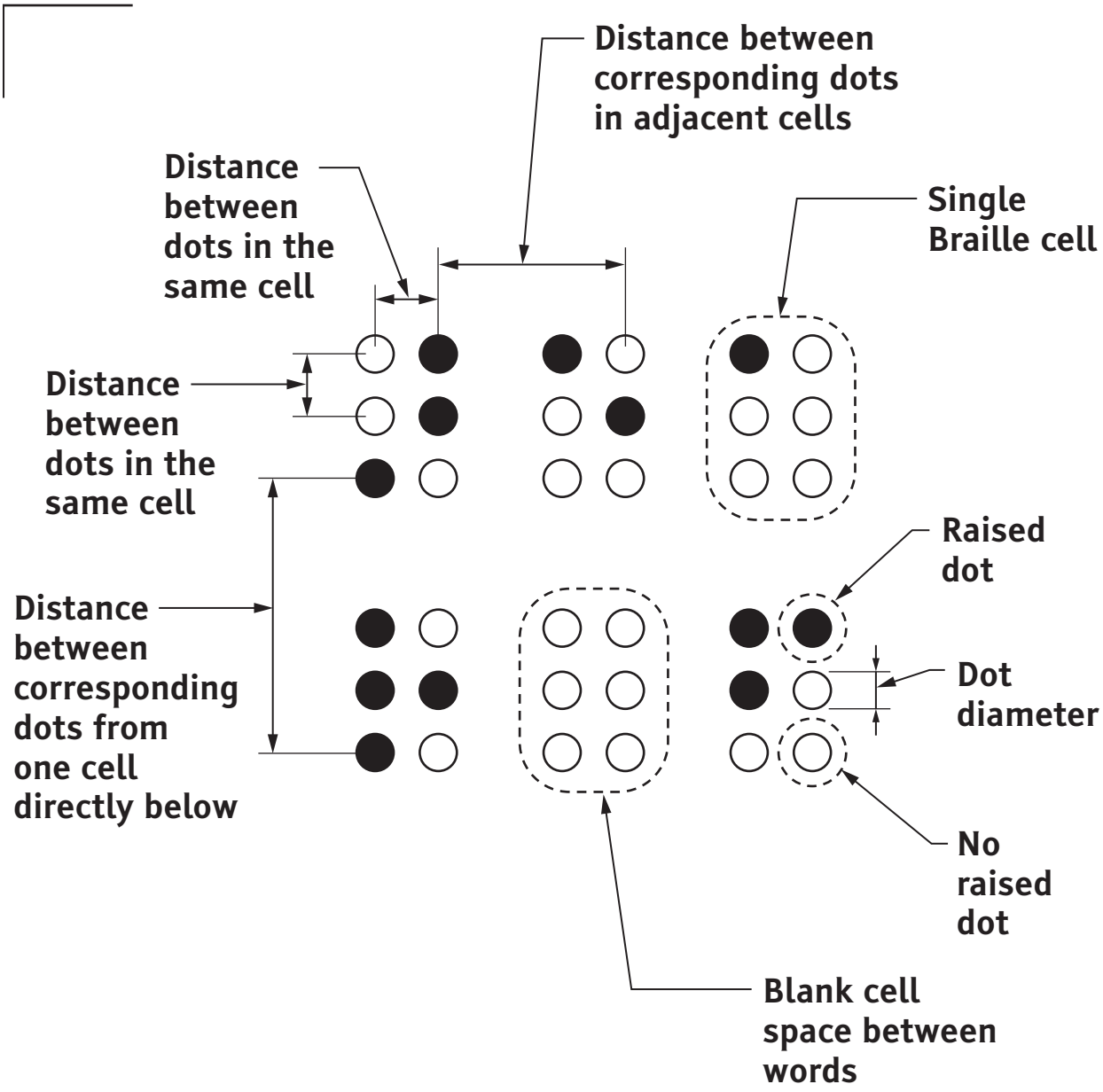

E.20.4.4 Position

Braille shall be below the corresponding text. If text is multilined, Braille shall be placed below the entire text. Braille shall be separated 10 mm (0.4 in.) minimum from any other raised characters and 10 mm (0.4 in.) minimum from raised borders and

decorative elements. Braille provided on elevator car controls shall be separated 5 mm (0.2 in.) minimum either directly below or adjacent to the corresponding raised characters or symbols.

E.20.5 Pictograms

E.20.5.1 General

Pictograms shall comply with Clause E.20.5.

E.20.5.2 Pictogram field

Pictograms shall have a field 150 mm (6 in.) minimum in height. Characters or Braille shall not be located in the pictogram field.

E.20.5.3 Finish and contrast

Pictograms and their fields shall have a non-glare finish. Pictograms shall contrast with their fields, with either a light pictogram on a dark field or a dark pictogram on a light field.

Figure E.20.6.3
International symbol of accessibility

(a)
Proportions

(b)
Display conditions

E.20.6 Symbols of accessibility

E.20.6.1 General

Symbols of accessibility shall comply with Clause E.20.6.

E.20.6.2 Finish and contrast.

Symbols of accessibility and their backgrounds shall have a non-glare finish. Symbols of accessibility shall contrast with their backgrounds, with either a light symbol on a dark background or a dark symbol on a light background.

E.20.6.3 International symbol of accessibility

The International Symbol of Accessibility shall comply with Figure E.20.6.3.

E.20.7 Variable message signs

E.20.7.1 General

Where provided, variable message signs shall have high resolution variable message sign (VMS) characters with a vertical pixel count of 16 rows or greater and shall comply with Clause E.20.7.

E.20.7.2 Protective covering.

Where a protective layer is placed over VMS characters through which the VMS characters must be viewed, the protective covering shall have a non-glare finish.

E.20.7.3 Rate of change.

Where a VMS message can be displayed in its entirety on a single screen, it shall be displayed on a single screen and shall remain motionless on the screen for a minimum of 3 sec, or 1 sec minimum for every 7 characters of the message including spaces, whichever is longer.

Annex F (informative)
References for accessible outdoor recreational environments

Note: This Annex is not a mandatory part of this Standard.

F.1 Standards

CSA Z614-07, Children's playspaces and equipment

F.2 Online resources

Accessible Trail Index for Wheelers and Slow Walkers — www.accessibletrails.com

Accessible Trails in the Olympic Peninsula — www.accessibletrails.com/olympictrails

National Trails Training Partnership — www.americantrails.org

Accessibility for All — Park Trails — www.dnr.state.md.us

Accessible playgrounds — www.ksldesign.ca

ADATA_ORG.mht
http://www.fhwa.dot.gov/environment/rectrails/guidance_accessibility.htm

http://www.accessgolf.org/

F.3 Publications

Axelson, P., Longmuir, P., Mispagel, K., and Passo, M. 2003. **Universal Trail Assessment Process Trainer Manual.** Minden, NV: PAX Press

Axelson, P., Longmuir, P., Mispagel, K., and Passo, M. 2003. **Universal Trail Assessment Process Trainer Resource Manual.** Minden, NV: PAX Press.

Axelson, P., Longmuir, P., Mispagel, K., and Passo, M. 2003. **Universal Trail Assessment Process Master Trainer Manual.** Minden, NV: PAX Press

Axelson, P., Kelley, W., Longmuir, P., Mispagel, K., Passo, M., Pasternak M., Pratt, T., Tuohy, J., Wong, K., Wright, W., and Yamada, D.A. 2002. **Universal Trail Assessment Process training guide: Assessing outdoor paths, access routes, and trails to collect access, mapping, and maintenance information.** Minden, NV: PAX Press.

Axelson, P.W., Chesney, D.A., Galvan, D.V., Kirschbaum, J.B., Longmuir, P.E., Lyons, C., and Wong, K.M. 1999. **Designing sidewalks and trails for access — Part I of II: Review of existing guidelines and practices.** Washington, D.C.: Federal Highway Administration.

Axelson, P.W., Yamada, D.A., Longmuir, P., Coutts, K., Rose, S., Smith, J., and Ysselstein, J. 1999. **Accessible exterior surfaces: Technical report.** Washington, DC: U.S. Architectural and Transportation Barriers Compliance Board.

Axelson, P.W., Kirschbaum, J., Yamada, D., Siekman, A., Kambitsch, K., Longmuir, P., McCambridge, M., and Mispagel, K. 1999. **Recommendations for addressing accessibility in amusement parks.** Alexandria, VA: International Association of Amusement Parks and Attractions.

Axelson, P.W., Yamada Chesney, D., Longmuir, P.E., and Wright, W. 1998. **Computerized mapping of outdoor trails for accessibility.** Phase II final report. Bethesda, MD: National Institute of Child Health and Human development, National Institutes of Health.

Bhambhani, Y., Coutts, K., Longmuir, P. E., Lyons, R., Seidl, C., and Wheeler, G. 2002. **Inclusive fitness and lifestyle services for all disabilities.** Ottawa, ON: Canadian Society for Exercise Physiology.

Kirschbaum, J.B., Axelson, P.W., Longmuir, P.E., Mispagel, K.M., Stein, J.A., and Yamada, D.A. 2001. **Designing sidewalks and trails for access — Part II of II: Best practices design guide.** Washington, DC: U.S. Department of Transportation.

Longmuir, P.E., and Axelson P.W. 1996. **Assistive technology for recreation.** In J.C. Galvin and M.J. Scherer (Eds.). Evaluating, selecting and using appropriate assistive technology. Gaithersburg, MD: Aspen Publishers, Inc., pp. 162–191.

Longmuir, P.E., and Axelson, P.W. (In review). **Sport equipment.** In S. Gavron and K. DePauw (Eds.), Disability and Sport. Champaign, IL: Human Kinetics.Longmuir, P.E., Finney, D., & Conrad, J. (In review). Canadian TrailPAQ Inventory Process training manual. Ottawa, ON: Go for Green

Longmuir, P.E. 2003. **Creating inclusive physical activity opportunities: An abilities-based approach.** In R.D. Steadward, E.J. Watkinson, & G.D. Wheeler (Eds.), Adapted Physical Activity. Edmonton, AB: University of Alberta Press, pp. 363–382.

CSA Group prints its publications on recycled stock, which contains 100% post-consumer fibre and is Processed Chlorine Free (PCF).

100%

ISBN 978-1-55491-929-1