CERTIFICATION Informs

An Urgent Bulletin from CSA International

Ref No: I11-055

Sports and Recreational Equipment No. 16

Date: June 7, 2011

New Service available as of today

Apply any time to have your products evaluated

Announcing: Publication of CSA Standard Z262.8-09, Face protectors for use in lacrosse

Class No: 7263 03, SPORTS SAFETY EQUIPMENT - Face protectors for use in lacrosse

To purchase the Standard, visit us at www.shopcsa.ca

Who is affected?

Manufacturers of Face Protectors for use in Lacrosse.

What do you do?

1. This publication provides for new certification services.
2. Please contact CSA engineering staff if you have questions or need information concerning this publication and how it applies to you.
3. If you would like to take advantage of the new certification services, initiate a certification project by contacting our Client Services Centre at 1-866-797-4272. Please supply appropriate supporting documentation* and we will inform you of the samples required.

*Technical information as well as company name, address, factory locations and CSA file number or master contract number (if assigned) when applying.

Approvals:

This is the first edition of CAN/CSA Z262.8-09, *Face protectors for use in lacrosse*. This Standard was prepared at the request of the Canadian Lacrosse Association. The companion document to this Standard is CSA Z262.1 – Ice Hockey Helmets. This Standard was prepared by the Technical Committee on Equipment and Facilities for Ice Hockey, under the jurisdiction of the Strategic Steering Committee on Community Safety and Well-Being, and has been formally approved by the Technical Committee. It will be submitted to the Standards Council of Canada for approval as a National Standard of Canada.

Background and Rationale:

This Standard was developed to address face protectors for use in lacrosse only in conjunction with specific CSA Certified Ice Hockey Helmet(s), as per CSA Z262.1. Therefore, CSA International is pleased to announce the expansion of our certification programs to include a new certification program to assess these products to the new Standard. See attachment 1 for details on revisions to the published standard that will be implemented in the product certification program.

For questions specific to your file or products contact your regular CSA International engineering staff.
Go to http://directories.csa-international.org/ and enter your Master Contract # and the class numbers associated with this Informs to view your certified products.

For technical questions on this Informs

Contact Vicki Furukawa
by phone 416.747.2678, fax 416.747.4149
or e-mail vicki.furukawa@csa-international.org

CSA INTERNATIONAL

Visit us at www.csa-international.org Click on "Contact Us" for the online phone listing of our Offices and Partners

ATTACHMENT 1

In the published Standard, Figure 6 as referenced in Clause 5.5.1, the dimension of the radius was incorrect. There is an errata issued to address this issue as documented in the April 2010 minutes (M34.4.5). The attached Figure 6 (drawing no. 2243-001-R1) is the correct version. In addition, reference in Clause 5.6.1.4 to Z262.6 head form was amended by the Technical Committee as documented in the September 2010 minutes (M35.9.2), to permit Z262.6-02 head forms to be used in the testing of lacrosse face protectors.

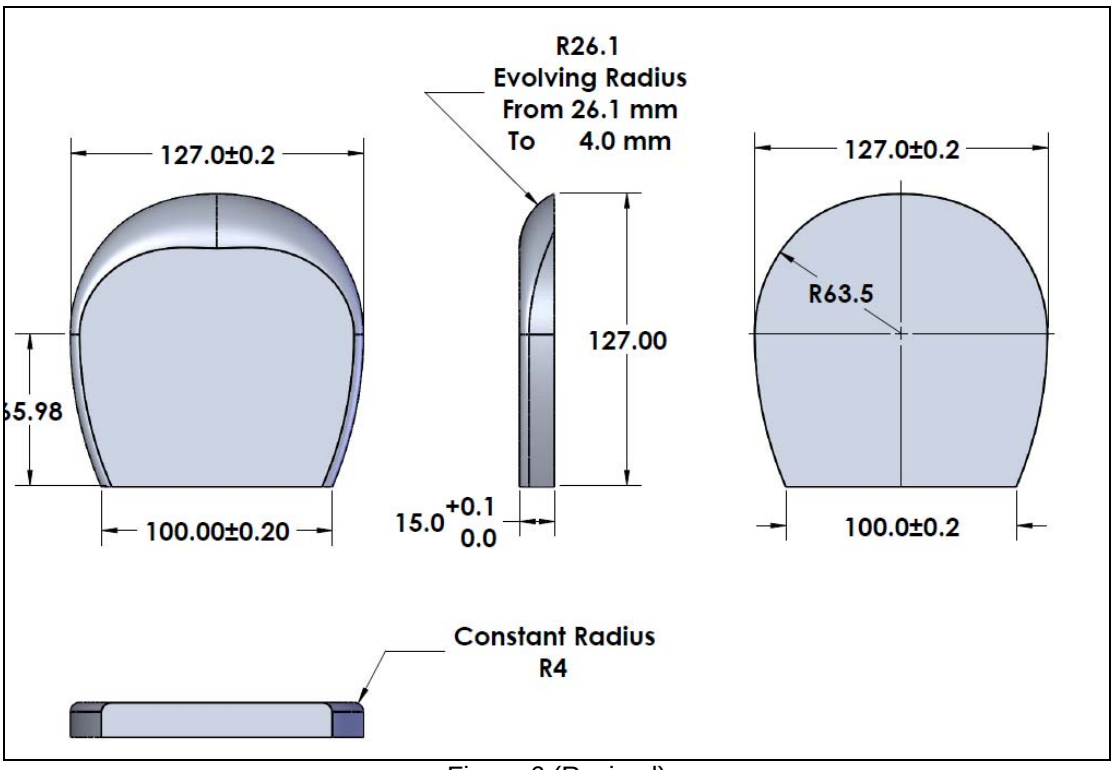

Figure 6 (Revised)
Drawing No. 2243-001-R1